CITY OF ALAMEDA

MAINTENANCE SPECIFICATIONS AND PLANS

FOR

UPDATE CCTV SYSTEM AT THE ALAMEDA CIVIC CENTER PARKING STRUCTURE, 1416 Oak Street, Alameda, CA No. P.W. 05-15-09

NO PREBID MEETING

BID DUE DATE:	Wednesday, May 13, 2015 by 2 p.m.
BID OPENING TIME:	2:01 p.m.
LOCATION:	Public Works Department 950 W. Mall Square, Room 110 Alameda, CA 94501

Jesse Barajas
Public Works Superintendent

TABLE OF CONTENTS

Section I.	Proposal and Contract Requirements
Section II.	Legal Relations and Responsibility
Section III.	Scope of Work
Section IV.	Control
Section V.	Measurements and Payments
Section VI.	Quantities
Section VII.	Construction Details

Exhibit A	Bidder's Proposal
Exhibit B	Contractor's Certified Payroll Forms
Exhibit C	Contractor Agreement
Exhibit D	Emergency Form
Exhibit E	Performance Bond Form
Exhibit F	Payment Bond Form
Exhibit G	Bidder's Bond
Exhibit H	CCTV Camera Specifications

CITY OF ALAMEDA, CALIFORNIA

SPECIFICATIONS, SPECIAL PROVISIONS AND PLANS
FOR
MAINTENANCE

SECTION I. PROPOSAL AND CONTRACT REQUIREMENTS

A. GENERAL INFORMATION. The City of Alameda will receive sealed bid at the time and place specified in the advertisement calling for bids for:

UPDATE CCTV SYSTEM AT ALAMEDA CIVIC CENTER PARKING STRUCTURE
(1416 Oak Street, Alameda, CA)
No. P.W. 05-15-09

Electronic specifications and bidders forms for bidding this project can only be obtained at the City of Alameda website, www.cityofalamedaca.gov/Business/Bids-RFPs. There is no cost for the specifications.

B. EXAMINATION OF PLANS, SPECIFICATIONS, SPECIAL PROVISIONS AND SITE OF WORK. The bidder is required to examine carefully the site and the proposal, plans, specifications and contract forms for the work contemplated, and it will be assumed that the bidder has investigated and is satisfied as to the conditions to be encountered, as to the character, quality and quantities of work to be performed and materials to be furnished, and as to the requirements of the specifications, the special provisions and the contract.

C. DESIGNATIONS. As used herein "City" shall mean the City of Alameda; "Council" or "City Council" shall mean the Council of the City; "City Manager" shall mean the City Manager of the City; "Engineer" or "PW Supervisor" shall mean the Public Works Supervisor or Public Works Supervisor's designee of the City; "Director" shall mean the Public Works Director of the City; and "Contractor" shall mean the bidder who is awarded the contract for the work.

D. PROPOSAL FORM. All bids must be made upon blank forms which are included in these specifications (Exhibit A).

All bids must give the prices proposed, **both in writing and in figures.** Bids must be signed by the Bidder. If the proposal is signed by an individual, that individual's name and business address must be shown. If made by a firm or partnership, the name and the post office address of each member of the firm or partnership must be shown. If made by a corporation, the proposal must show the name of the state under the laws of which the corporation was chartered and the names, titles, and business addresses of the president, secretary and treasurer.

E. PRESENTING AND MARKING OF BIDS. Bids must be presented to the Public Works Department, 950 W. Mall Square, Room 110, Alameda, California, under sealed cover, plainly marked on the outside, "**UPDATE CCTV SYSTEM AT ALAMEDA CIVIC CENTER PARKING STRUCTURE (1416 Oak Street, Alameda, CA), No. P.W. 05-15-09**", not later than **2:00 p.m.** on the date set forth in the following paragraph.

Bids will be opened in the Public Works Department, 950 W. Mall Square, Room 110, Alameda, California**, at 2:01 p.m. on May 13, 2015.**

F. BIDDER'S GUARANTY. All bids shall be accompanied by one of the following forms of bidder's guaranty: cash, a cashier's check, a certified check, or a bidder's bond executed by an admitted surety insurer, made payable to the City of Alameda. The security shall be in an amount equal to at least ten percent (10%) of the amount bid. A bid shall not be considered unless one of the forms of bidder's security is enclosed with it. If, in lieu of depositing cash, a cashier's check, or a certified check, the bidder submits a bidder's bond, the said bond shall, in form, be satisfactory to the City Attorney of the City of Alameda. A Bid Bond form is provided in Exhibit G.

Said bidder's guaranty which is submitted according to the above paragraph shall, in the event of the failure, for any reason, of the successful bidder or bidders to execute the contract as awarded, be deemed to be liquidated damages to be retained in full by the City of Alameda, but shall not be construed as a penalty for failure to execute said contract. The full amount of the said bidder's guaranty shall also be retained in full by the City of Alameda as consideration payable to the City of Alameda for engineering, accounting and clerical services in formulating specifications for such bid or bids, for advertising costs to the City of Alameda in connection with such bid or bids, and further, as consideration for the award of such contract to such bidder or bidders.

Any bid bond submitted under this Section shall incorporate therein by reference, or otherwise, all of the provisions of Section I, Item F, of these specifications.

G. RETURN OF BIDDER'S GUARANTIES. Within ten (10) days after the award of the contract, the Public Works staff will return the proposal guaranties accompanying the bids which are not to be considered in making the award. All other proposal guaranties will be held until the contract has been finally executed, after which they will be returned to the respective bidders whose bids they accompanied.

H. TAXES. Bids must include all state and federal taxes applicable to the transaction.

I. SUBCONTRACTORS. All contractors shall comply with the State Subletting and Subcontracting Fair Practices Act, located in Sections 4100 through 4112 of the California Public Contract Code. A copy of said Act is available in the office of the PW Supervisor. Said Act is hereby made a part of the specifications on the above-mentioned job and all contractors submitting bids shall accompany the bid with information regarding subcontractors as therein provided. All Subcontractors shall have a current City of Alameda business license.

J. REJECTION OR RETURN OF BIDS. Bids may be rejected if they show any alterations of form, additions not called for, conditional or alternative bids, incomplete bids, erasures or irregularities of any kind. The right is reserved to reject any and all bids. The City reserves the right to return bids unopened.

K. BID PROTEST. Any bid protest must be submitted in writing to the Public Works Director, City of Alameda Public Works Department, City Hall West, 950 West Mall Square, Room 110, Alameda, CA 94501 before 5:00 p.m. of the 10th business day following bid opening.

1. The initial protest document shall contain a complete statement of the basis for the protest.
2. The protest shall refer to the specific portion of the document which forms the basis for the protest.
3. The protest shall include the name, address, and telephone number of the person representing the protesting party.
4. The party filing the protest shall concurrently transmit a copy of the initial protest document and any attached documentation to all other parties with a direct financial interest which may be adversely affected by the outcome of the protest. Such parties shall include all other Bidders or proposers who appear to have a reasonable prospect of receiving an award depending upon the outcome of the protest.
5. The Public Works Director will issue a decision on the protest. If the Public Works Director determines that a protest is frivolous, the party originating the protest may be determined to be irresponsible and that party may be determined to be ineligible for future contract awards.
6. The procedure and time limits set forth in this paragraph are mandatory and are the Bidder's sole and exclusive remedy in the event of Bid protest and failure to comply with these procedures shall constitute a waiver of any right to further pursue the bid protest, including filing a Government Code Claim or legal proceedings.

L. AWARD OF CONTRACT. The award of contract, if it be awarded, will be to the responsible bidder who submits the lowest and best bid and whose proposal complies with all requirements described herein. The award, if made, will be made within ninety (90) days after the opening of the bids. All bids will be compared on the basis of the Engineer's estimate of quantities of work to be done. In the event of a delay the City reserves the right to hold the Bidder to its bid for 90 days from the date the contract is awarded.

Bid protests, contracts, bonds, insurance, and other documents identified in these specifications and these special provisions are to be delivered to the following City address: City of Alameda, City Hall West, Public Works Department, 950 West Mall Square, Room 110, Alameda, CA 94501.

M. EXECUTION OF CONTRACT. The contract, in form and content satisfactory to the City, will be awarded at a regular City Council meeting (first and third Tuesdays of each month, except August). At least five (5) business days prior to the anticipated award date, the Contractor will be notified of apparent award status and requested to provide the documents necessary to complete the contract process. Required documentation shall include two (2) copies of the contract executed by the Contractor, proof of insurance and Payment and Performance bonds. The Contractor will be given five (5) business days from the date the City Council awards the contract to obtain the relevant bonds and insurance along with any other documents required for submission.

No proposal shall be considered binding upon the City until the execution of the contract. Failure to execute a contract and file acceptable bonds and insurance as provided herein within the time frame outlined above shall be just cause for the annulment of the award and the forfeiture of the bidder's guaranty.

N. CONTRACT BONDS. The Contractor shall furnish two good and sufficient bonds. One of the bonds shall be executed in a sum equal to at least one hundred percent (100%) of the contract price, which shall be furnished as required by the Terms of Section 3247 to 3252 of the Civil Code of the State of California (see Exhibit F). The other bond shall guaranty faithful performance of the said contract by the Contractor and shall be executed in a sum equal to at least one hundred percent (100%) of the contract price (see Exhibit E). Bonds shall be furnished by a surety company satisfactory to the City of Alameda.

Whenever any surety or sureties on any such bonds, or any bonds required by law for the protection of the claims of laborers and materials, become insufficient or the City PW Supervisor has cause to believe that such surety or sureties have become insufficient, a demand in writing may be made of the Contractor for further bond or bonds or additional surety not exceeding that originally required, as is considered necessary, taking into account the extent of the work remaining to be done. Thereafter no payment shall be made upon such contract to the Contractor, or any assignee of the Contractor, until such further bond or bonds or additional surety has been furnished. Faithful performance bonds, whether by individual or corporate surety, shall in addition to other terms and conditions, contain the conditions that (1) death of the named principal shall not operate as a release of the obligation hereunder of the surety, and (2) extensions of time, if any, granted by the City to Contractor for performance of the work covered by said bond shall extend for a like time the period of limitations during which surety shall remain bound by the said undertaking.

SECTION II. LEGAL RELATIONS AND RESPONSIBILITIES

A. LAWS TO BE OBSERVED. The Contractor shall keep himself fully informed of all existing and future state and federal laws and all municipal ordinances and regulations of the City of Alameda which in any manner affect those engaged or employed in the work, or the materials used in the work, or which in any way affect the conduct of the work, and of all such orders and decrees of bodies or tribunals having any jurisdiction or authority over the same.

B. DEPARTMENT OF INDUSTRIAL RELATIONS COMPLIANCE AND PREVAILING WAGE REQUIREMENTS ON PUBLIC WORKS PROJECTS.

1. Effective January 1, 2015, No Contractor or Subcontractor may be listed on a bid proposal for a public works project (submitted after March 1, 2015) unless registered with the Department of Industrial Relations pursuant to Labor Code Section 1725.5 (with the limited exceptions from this requirement for bid purposed only under Labor code Section 1771.1(a)). Register at https://efiling.dir.ca.gov/PWCR

2. No Contractor or Subcontractor may be awarded a contract for public work on a public works project (awarded on or after April 1, 2015) unless registered with the Department of Industrial Relations pursuant to Labor Code Section 1725.5.

3. This project is subject to compliance monitoring and enforcement by the Department of Industrial Relations.

4. The Prime Contractor is required to post job site notices prescribed by regulation See 8 Calif. Code Regulation §16451(d).

5. Effective April 1, 2015, All Contractors and Subcontractors must furnish electronic certified payroll records directly to the Labor Commissioner. https://apps.dir.ca.gov/ecpr/das/altlogin

C. PREVAILING WAGES:

1. The Contractor is aware of the requirements of California Labor Code sections 1720 et seq. and 1770 et seq., as well as California Code of Regulations, Title 8, section 16000 et seq. ("Prevailing Wage Laws"), which require the payment of prevailing wage rates and the performance of other requirements on certain "public works" projects. Since this Project involves a "public work" project, as defined by the Prevailing Wage Laws, Contractor shall fully comply with such Prevailing Wage Laws. Contractor's failure to comply with the Prevailing Wage Law may constitute a default under the contract for performance of the Work which would entitle the City to rescind the contract or exercise other remedies as provided by law or the contract.

2. The Contractor shall obtain a copy of the prevailing rates of per diem wages at the commencement of this Contract from the website of the Division of Labor Statistics and Research of the Department of Industrial Relations located at www.dir.ca.gov/dlsr/. In the alternative, the Contractor may view a copy of the prevailing rates of per diem wages at the

City's Public Works Department, Building 1, 950 W. Mall Square, Room 110, Alameda. The Contractor shall make copies of the prevailing rates of per diem wages for each craft, classification or type of worker needed to perform work on the Project available to interested parties upon request, and shall post copies at the Contractor's principal place of business and at the Project site. The Contractor shall defend, indemnify and hold the City, its elected officials, officers, employees and agents free and harmless from any claims, liabilities, costs, penalties or interest arising out of any failure or allege failure to comply with the Prevailing Wage Laws and/or the City's Labor Compliance Program (hereinafter referred to as "LCP"), if any.

3. If this project is funded in whole or in part with Federal monies and subject to the provisions of the Davis-Bacon Act, the successful bidder shall pay not less than the wage rates determined by the Secretary of Labor. The Federal wage rates shall apply unless the State wage rates are higher. The Federal Wage Rates applicable to the contract are those current within ten (10) days of the bid due date.

4. The Contractor and all subcontractors shall pay and shall cause to be paid each worker engaged in work on the Project not less than the general prevailing rate of *per diem* wages determined by the Director, regardless of any contractual relationship which may be alleged to exist between the Contractor or any Subcontractor and such workers.

5. The Contractor and all subcontractors shall pay and shall cause to be paid to each worker needed to execute the work on the Project travel and subsistence payments, as such travel and subsistence payments are defined in the applicable collective bargaining Contracts filed with the Department of Industrial Relations in accordance with Labor Code § 1773.8.

6. If during the period any bid for work on this Project remains open, the Director of Industrial Relations determines that there has been a change in any prevailing rate of *per diem* wages in the locality in which this public work is to be performed, such change shall not alter the wage rates in the Notice calling for Bids or the contract subsequently awarded.

7. Pursuant to Labor Code § 1775, the Contractor shall as a penalty to the City, forfeit Fifty Dollars ($50.00) for each calendar day, or portion thereof, for each worker paid less than the prevailing rate of *per diem* wages, determined by the Director, for such craft or classification in which such worker is employed for any public work done under the Contract by the Contractor or by any Subcontractor under it. The amount of the penalty shall be determined by the Labor Commission. In addition, the difference between such prevailing rate of *per diem* wage and the amount paid to each worker for each calendar day or portion thereof for which each worker was paid less than the prevailing rate of *per diem* wage shall be paid to each work by the Contractor.

8. Any worker employed to perform work on the Project, which work is not covered by any craft or classification listed in the general prevailing rate of *per diem* wages determined by the Director, shall be paid not less than the minimum rate of wages specified therein for the craft or classification which most nearly corresponds to the work on the Project to be performed by them, and such minimum wage rate shall be retroactive to time of initial employment of such person in such craft or classification.

9. For those crafts or job classifications requiring special prevailing wage determinations, please contact the Division of Labor Statistics and Research, Prevailing Wage Unit, P.O. Box 420603, San Francisco, CA 94142-0603, (415) 703-4774 or check out the web site at www.dir.ca.gov.

D. HOURS OF LABOR.

1. As provided in Article 3 (commencing at § 1810), Chapter 1, Part 7, Division 2 of the Labor Code, eight (8) hours of labor shall constitute a legal day's work. The time of service of any worker employed at any time by the Contractor or by any Subcontractor on any subcontract under this Contract, upon the work or upon any part of the work contemplated by this Contract, is limited and restricted to eight (8) hours during any one calendar day and forty (40) hours during any one calendar week, except as hereinafter provided. Notwithstanding the provision hereinabove set forth, work performed by employees of Contractor in excess of eight (8) hours per day and forty (40) hours during any one week shall be permitted upon this public work provided that the employees' compensation for all hours worked in excess of eight (8) hours per day at not less than one and one-half (1-1/2) times the basic rate of pay.

2. The Contractor shall pay to the City a penalty of Twenty-five Dollars ($25.00) for each worker employed in the execution of this Contract by the Contractor, or by any Subcontractor, for each calendar day during which such worker is required or permitted to work more than eight (8) hours in any calendar day and forty (40) hours in any one (1) calendar week, in violation of the provisions of Article 3 (commencing at § 1810), Chapter 1, Part 7, Division 2 of the Labor Code, unless compensation for the workers so employed by Contractor is not less than one and one-half (1-1/2) times the basic rate of pay for all hours worked in excess of eight (8) hours per day.

3. Holiday and overtime work, when permitted by law, shall be paid for at a rate of at least one and one-half (1½) times the above specified rate of *per diem* wages, unless otherwise specified. Holidays shall be defined in the Collective Bargaining Contract applicable to each particular craft, classification, or type of worker employed.

E. CERTIFIED PAYROLL.

1. Contractor's attention is directed to California Labor Code Section 1776, which requires Contractor and any subcontractors to keep an accurate payroll record and which imposes inspection requirements and penalties for non-compliance. Certified payrolls shall be prepared and submitted weekly to the Labor Compliance Officer, Gail Carlson, Public Works Department, 950 W. Mall Square, Room 110, Alameda, CA 94501 by the Contractor and each subcontractor. Contractor is responsible for the submission of copies of payrolls by all subcontractors. Each payroll submitted shall be accompanied by a "Statement of Compliance", signed by the Contractor or subcontractor or his/her agent who pays or supervises the payment of the persons employed under the contract, and shall certify the following:

a. That the payroll for each payroll period contains the name, social security number, and address of each employee, his or her correct classification, including applicable area and group code, hourly rates of wages paid, daily and weekly number of hours worked, deductions made and actual wages paid, and that such information is correct and complete;

b. That such laborer or mechanic (including each helper, apprentice and trainee) employed on the contract during the payroll period has been paid the full weekly wages earned, without rebate, either directly or indirectly, and that no deductions have been made either directly or indirectly from the full wages earned, other than permissible deductions; and

c. That each laborer or mechanic has been paid not less than the applicable wage rates and fringe benefits or cash equivalents for the classification of work performed, as specified in the applicable wage determination incorporated into the contract.

2. If the Contractor or a subcontractor does not work during the payroll period, a Statement of Non-Working Days must be submitted for each day not worked.

3. In the event of noncompliance with the requirements of such section after 10 Days written notice specifying in what respects compliance is required, the CONTRACTOR shall forfeit as a penalty to the CITY, $25.00 for each calendar Day, or portion thereof, for each worker, until strict compliance is effectuated. Upon the request of the Division of Apprenticeship Standards or the Division of Labor Standards Enforcement, such penalties shall be withheld from progress payments then due.

F. APPRENTICES.

1. Attention is directed to the provisions in sections 1777.5 and 1777.6 of the Labor Code concerning the employment of apprentices by the Contractor or any subcontractor under him on contracts greater than $30,000 or 20 working days. The Contractor and any subcontractor under him shall comply with the requirements of Sections 1777.5 and 1777.6 in the employment of apprentices.

2. Section 1777.5 requires the Contractor or subcontractor employing workers in any apprenticeable occupation to apply to the joint apprenticeship committee nearest the site of the public works project, and which administers the apprenticeship program in that trade, for a certificate of approval, if they have not previously applied and are covered by the local apprenticeship standards.

3. The Contractor is required to make contributions to funds established for the administration of apprenticeship programs if: (1) the Contractor employs registered apprentices or journeymen in any apprenticeable trade on such contracts and if other contractors on the public works site are making such contributions; or (2) if the Contractor is not a signatory to an apprenticeship fund and if the funds administrator is unable to accept Contractor' required contribution. The Contractor or subcontractor shall pay a like amount to the California Apprenticeship Council.

4. Information relative to apprenticeship standards, wage schedules, and other requirements may be obtained from the Director of Industrial Relations, ex-officio the Administrator of Apprenticeship, San Francisco, California, or from the Division of Apprenticeship Standards and its branch offices.

G. LABOR DISCRIMINATION. No discrimination shall be made in the employment of persons upon public works because of the race, color, sex, religion, age, national origin, sexual orientation, or physical disability of such persons and every Contractor for public works violating this section is subject to all the penalties imposed for a violation of the provisions of the Labor Code, and, in particular, Section 1735.

H. REGISTRATION OF CONTRACTORS. Before submitting bids, contractors shall be licensed in accordance with the provisions of Chapter 9, Division 3, of the Business and Professional Code of the State of California.

I. PERMITS AND LICENSES. The Contractor shall procure all permits and licenses, including City of Alameda business licenses, pay all charges and fees, and give all notices necessary and incidental to the due and lawful prosecution of the work. However, the contractor will be reimbursed for construction permit fees. The estimated cost shown as an allowance in

the bid proposal is only for bidding purposes. Payment shall be made for the actual cost of the permit. The cost for a City of Alameda business license is not reimbursable. Each Subcontractor shall have a current City of Alameda business license.

The following permit(s) and/or license(s) are required for this project:

1. **A City of Alameda Business License from the City of Alameda, 2263 Santa Clara Avenue, Finance Department, Room 220, Alameda**.

J. PATENTS. The Contractor shall assume all costs arising from the use of patented materials, equipment, devices or processes used on or incorporated in the work, and agrees to indemnify and hold harmless the City of Alameda, its officers, employees and agents from all suits at law or actions of any nature, damages, royalties and costs on account of the use of any patented materials, equipment, devices or processes.

K. RESPONSIBILITY FOR DAMAGES. The City of Alameda, its officers, employees and agents shall not be answerable or accountable in any manner for any loss or damage to the work or any part thereof, nor to any material or equipment used in performing the work, nor for injury or damage to any person or persons, either workers or the public, nor for damage to adjoining property from any cause whatsoever during the progress of the work nor at any time before final acceptance.

L. CONTRACTOR'S RESPONSIBILITY FOR THE WORK. Except as provided above, until formal acceptance of the work by the City, the Contractor shall have the charge and care thereof and shall bear the risk of injury or damage to any part thereof by the action of the elements or from any other cause, whether arising from the execution or from the non-execution of the work. The Contractor shall rebuild, repair, restore and make good all injuries or damages to any portion of the work occasioned by any of the above causes before final acceptance and shall bear the expense thereof, except such injuries or damages occasioned by acts of the Federal Government or the public enemy. The Contractor will not be responsible for the cost of repairing or restoring damage to the work, which damage is determined to have been proximately caused by an act of God, in excess of 5% of the contracted amount.

M. SAFETY PROVISIONS. The Contractor shall conform to the rules and regulations pertaining to safety established by the California Division of Occupational Safety and Health of the Industrial Relations Department (CAL-OSHA).

N. NO PERSONAL LIABILITY. Neither the City Council, City Manager, the City PW Supervisor, nor any other City officer, authorized assistant or agent shall be personally responsible for any liability arising under this contract.

O. RESPONSIBILITY OF CITY. The City of Alameda shall not be held responsible for the care or protection of any material or parts of the work prior to final acceptance, except as expressly provided in these specifications.

P. PUBLIC CONVENIENCE AND SAFETY. The Contractor shall so conduct operations as to cause the least possible obstruction and inconvenience to public traffic. The Contractor shall furnish, erect and maintain such fences, barriers, lights and signs as are necessary or as required by the PW Supervisor to give adequate warning to the public at all times that the work is in progress and of any dangerous conditions to be encountered as a result of the work or of the presence of the Contractor's equipment or machinery.

Q. NOTICES TO CONTRACTOR. Any notice required to be given to the Contractor by the City of Alameda or by the City PW Supervisor or by any officer of said City may be given to said Contractor at the address shown in the Contractor's proposal. Such notice may be given by mailing a copy of said notice to the Contractor to such address by United States certified mail. Evidence of such mailing shall be deemed the equivalent of personal services of said notice.

R. UTILITIES. The location of railroad tracks, utility facilities and other structures shall be the responsibility of the Contractor. The Contractor shall contact the owners of those tracks, facilities and structures for any information that may be required. The Contractor shall contact Underground Services Alert (USA) at 800-642-2444 forty-eight (48) hours prior to commencement of work.

Where existing sewers and storm drains cross or interfere in any way with construction under this contract, they shall be left in place and the Contractor shall work around them, or where feasible and practical, the Contractor may, with the permission of the City PW Supervisor, remove and replace them at his/her own expense. Precautions shall be exercised to provide bearing under existing sewer lines so encountered to preclude settlement during or after the term of the contract. In the event that some of these sewers are abandoned, they may, with the permission of the City PW Supervisor, be removed and not replaced. The Contractor shall provide submittals for the PW Supervisor's review and approval for supporting utilities.

The owners of pipes, wires, conduits, vaults and other utilities (other than sewers) located in the City streets which could conflict with the proposed work will be notified by the City PW Supervisor to remove or adjust the same, without cost to the Contractor, to such extent as will allow the prosecution of the work described herein according to the necessities thereof and in accordance with these specifications. Wherever and whenever the Contractor anticipates working in an area from which utilities must be removed at the expense of others, he/she shall notify the City PW Supervisor sufficiently in advance (a minimum of ten (10) working days) to permit the owners thereof to rearrange or abandon such utilities, and he/she shall cooperate with the owners thereof in the performance of the work under this contract.

The work will be so prosecuted that a minimum of damage will result to utility services. In the event that utility services are damaged or interrupted, the Contractor shall immediately, at his/her own expense, restore such services in a manner satisfactory to the PW Supervisor. In the event that an interruption of utility services is sustained for a period of longer than one-half hour, it shall be the responsibility of the Contractor to notify the occupants of the premises to which said services are connected, so that no damage will accrue on or to said premises.

The Contractor shall perform all work in such manner as to prevent damage to utilities lying outside of or below a required excavation of trench area.

S. SOUND CONTROL REQUIREMENTS. Sound control shall conform to Section 4-10 of the Alameda Municipal Code, which prohibits weekday construction activities between 7:00 pm and 7:00 am.

T. CONSTRUCTION SITE CONTROLS. Within five (5) business days of the date the work is to commence pursuant to the NTP the Contractor shall submit an Erosion/Stormwater Pollution Prevention Plan (SWPPP) to the PW Supervisor for review. The SWPPP shall include appropriate erosion and sediment control measures to effectively prevent the entry of soil, dirt, debris and other pollutants to storm water runoff, the storm drain system, lagoons and the bay/estuary during construction. No work in the field under this Contract may begin until the PW Supervisor has approved the Contractor's SWPPP.

Erosion and sediment control plans/sheets shall indicate the specifications and maintenance schedules for the installation and upkeep of the erosion control mechanisms. Specifications shall be provided for the erosion control practices, perimeter protection(s), any silt fencing and fiber rolls to be used, storm drain inlet protections, stabilized construction entrance(s) and exits, site and excavation dewatering activities, vehicle tire wash area(s), vehicle and equipment servicing area(s), and the materials handling and storage area(s). These specifications should meet the same level of erosion and sediment control effectiveness established by practices identified in the San Francisco Bay Regional Water Quality Control Board's Erosion and Sediment Control Field Manual (510-622-2465), the Association of Bay Area Government's Manual of Standards for Erosion and Sediment Control (510-464-7900) and/or the California Stormwater Quality Association's Stormwater Best Management Practice Handbook – Construction (2003) (www.cabmphandbooks.com). Contact City Public Works Department Clean Water Program Specialist Jim Barse (510-747-7930) for additional assistance in obtaining copies of these reference documents.

The Contractor is responsible for ensuring that all of his/her workers and subcontractors are aware of and implement the specific stormwater quality control measures under the approved SWPPP. The Contractor(s) shall avoid creating excess dust when breaking asphalt/concrete and during excavation and grading. If water is to be used as a measure for dust control, use as little as possible. All wash water shall be kept out of streets, gutters and storm drains. Controls shall be implemented before construction begins and maintained until the end of construction at which time they shall be removed.

Failure to comply with the following approved construction Best Management Practices ("BMPs") shall result in the issuance of correction notices, citations and/or a project stop order:

1. Gather all construction debris on a regular basis and place it in a dumpster or other container which is emptied or removed on a weekly basis. When appropriate, use tarps on the ground to collect fallen debris or splatters that could contribute to stormwater pollution. After breaking old pavement, remove all pieces to avoid contact with rainfall or runoff.
2. Remove on-site piles from the site on a regular basis. Only temporary storage is

allowed. All temporary soil or other stockpiles on site shall be securely covered with a tarp, plastic sheeting or similar material.

3. Remove all dirt/mud, gravel, rubbish, refuse and green waste from the sidewalk, street pavement, and storm drain system adjoining the project site daily and prior to rain. Clean up leaks, drips and spills immediately. Avoid unnecessary driving on unpaved areas during wet weather.

4. Install and maintain stabilized construction entrances to minimize the tracking of dirt, mud, dust and debris onto the public right-of-way.

5. Broom-sweep the sidewalk and public street pavement adjoining the project site daily and prior to rain. Caked-on mud or dirt shall be scraped from these areas before sweeping. At the completion of work the street shall be washed and the wash water collected and disposed offsite.

6. Install filter materials (such as block and gravel bags, sandbags, filter fabric) at the storm drain inlets surrounding the project site. Such inlet protections shall be installed before: the start of the rainy season (October 1st), site de-watering activities, saw-cutting activities, or any other activity that may result in the discharge of material to the storm drain. Filter materials shall be maintained and/or replaced as necessary to minimize short-cutting and to remove sediment deposits and buildup. Accumulated sediment/debris shall be disposed of properly.

7. Vacuum saw-cutting slurry and remove from site. Do not allow saw-cut slurry to enter the storm water conveyance system.

8. Create a contained and covered area on the site for the storage of cement bags, paints, flammables, oils, fertilizers, pesticides, or any other materials used on the project site that have the potential for being discharged to the storm drain system by wind, exposure to rainfall or in the event of a material spill.

9. Never clean machinery, tools, brushes, etc. or rinse containers into a street, gutter, storm drain or stream. See the *Building Maintenance and Remodeling* BMP flyer and ACCWP BMP brochures for more information. Contact the Public Works Department at 747-7930 for assistance with obtaining these documents.

10. Ensure that concrete/gunite supply trucks or concrete/plaster finishing operations do not discharge wash water into street gutters or drains. Concrete trucks shall have a self-contained washout system or discharge to a dedicated, secure site washout in order to avoid the possibility of debris on city streets or discharge of wash water to the storm water conveyance system.

11. Minimize removal of natural vegetation or ground cover from the site in order to minimize the potential for erosion and sedimentation problems. Re-plant the area, and stabilize all cut and fill slopes as soon as possible after grading is completed. At a minimum, 4,000 pounds/acre of straw with tackifier should be placed on all exposed soils including those within active work areas and flat lots. **No site grading shall occur between October 1 and May 31 unless approved erosion and sedimentation control measures are in place.**

12. Provide erosion "prevention" and perimeter protection measures (soil stabilization) such as fiber rolls, silt fence, and/or sediment traps or basins. Ensure control measures are adequately maintained and in operable condition. Sediment controls, including inlet protection, are necessary but should be a secondary defense behind good erosion control and site perimeter measures.

13. Design site de-watering operations to prevent the discharge of any sediment, debris or other pollutants to the municipal storm water conveyance system.

14. Maintain and if necessary, repair, all erosion prevention and sediment control measures throughout the contract term. Replacement supplies should be kept on site. Site inspections shall be conducted before and after each storm event, and every 24 hours for extended storm events, to identify areas that contribute to erosion and sediment problems or any other pollutant discharges. If additional measures are needed, inform the PW Supervisor immediately and document all inspection findings and actions taken.

15. Conduct visual observations before, during, and after storm events. Any breach, malfunction, leakage, or spill observed that could result in the discharge of pollutants to surface waters that might not be visually detectable in stormwater shall trigger the collection of a sample of discharge. The following procedures shall be followed during sampling:

<u>Sampling Procedures</u>:

- For all construction activity, identify a sampling and analysis strategy and sampling schedule for potential discharges discovered through visual monitoring.
- Any breach, malfunction, leakage, or spill observed during visual monitoring which could result in the discharge of pollutants to surface waters that would not be visually detectable in stormwater shall trigger the collection of a sample of discharge.
- Samples shall be collected at all discharge locations which drain the areas identified by the visual observations and which can be safely accessed.
- Personnel trained in water quality sampling procedures shall collect stormwater samples.
- An uncontaminated sample shall be collected for comparison with the discharge sample.
- Sampling shall be conducted during the first two hours of discharge from rain events that occur during daylight hours and which generate runoff.
- The uncontaminated sample shall be compared to the samples of discharge using field analysis or through laboratory analysis. Analyses may include, but are not limited to indicator parameters such as: pH, specific conductance, dissolved oxygen, conductivity, salinity, and TDS
- All field and/or analytical data shall be kept in the SWPPP document, which is to remain at the construction site at all times.

16. Contact the City of Alameda Public Works Department at 510-747-7930 in the event of any slope failure, sediment pond overflow, or any other malfunction resulting in sediment-laden runoff. The City shall, in turn, report such incidents to the Regional Water Quality Control Board.

17. Clearly mark with the words, “No Dumping! Drains to Bay” or the equivalent, using methods approved by the City of Alameda, onto the on-site storm drain inlets. All on-site storm drains must be inspected and, if necessary, cleaned, at least once a year immediately prior to the rainy season. Additional cleaning may be required by the City of Alameda.

18. Require all concrete trucks used in the performance of the work to have a self-contained washout system, rather than do washout on the site. The idea is to avoid:

a. An undesirable pile of concrete on the jobsite, and
b. The possibility of debris on city streets.

The objective of these Standard Conditions is to ensure that the City's municipal storm water Permit, the National Pollutant Discharge Elimination System (NPDES) Permit provisions and additional Regional Water Quality Control Board requirements are adequately enforced.

These recommendations are intended to be used in conjunction with the State's Best Management Practices Municipal and Construction Handbooks, local program guidance materials from municipalities, Section 7.1.01, of the Standard Specifications and any other appropriate documents on storm water quality controls for construction. If you need assistance in checking these documents, contact Clean Water Program Specialist at 510-747-7930.

Failure to comply with the above program will result in issuance of noncompliance notices, citations, project stop orders or fines. The fine for noncompliance of the above program is two hundred and fifty dollars ($250.00) per occurrence per day. The State under the Federal Clean Water Act can also impose a fine on the Contractor.

U. ASBESTOS AND LEAD BASED PAINTS. Reports of a survey of possible asbestos and lead based paints, in the path of construction, was prepared by ACC Environmental.

V. CLEAN AIR ACT OF 1970, ET SEQ. AND FEDERAL WATER POLLUTION CONTROL ACT AS AMENDED BY THE CLEAN WATER ACT OF 1977. The Contractor agrees to comply with federal clean air and water standards during the performance of this contract and specifically agrees to the following:

- The term "facility" means any building, plant, installation, structure, mine, vessel or other floating craft, location or site of operations owned, leased, or supervised by the Contractor and the subcontractors for the construction, supply and service contracts entered into by the Contractor;
- Any facility to be utilized in the accomplishment of this contract is not listed on the Environmental Protection Agency's List of Violating Facilities pursuant to 40 CFR, Part 15.20;
- In the event a facility utilized in the accomplishment of this contract becomes listed on the EPA list, this contract may be canceled, terminated, or suspended in whole or in part;
- It will comply with all the requirements of Section 114 of the Clean Air Act and Section 308 of the Water Pollution Control Act relating to inspection, monitoring, entry, reports, and information, as well as all other requirements specified in Section 114 and Section 308, respectively, and all regulations and guidelines issued thereunder;
- It will promptly notify the Government of the receipt of any notice from the Director, Office of Federal Activities, Environmental Protection Agency, indicating that any facility utilized or to be utilized in the accomplishment of this contract is under consideration for listing on the EPA List of Violating Facilities;
- It will include the provisions of Paragraph a. through g. in every subcontract or purchase order entered into for the purpose of accomplishing this contract, unless otherwise exempted pursuant to the EPA regulations implementing the Air or Water Acts above (40 CFR, Part 15.5), so that such provisions will be binding on each subcontractor or vendor;

In the event that the Contractor or the subcontractor for the construction, supply and service contracts entered into for the purpose of accomplishing this contract were exempted from complying with the above requirements under the provisions of 40 CFR, Part 15.5 (a), the exemption shall be nullified should the facility give rise to a criminal conviction (see 40 CFR 15.20) during the accomplishment of this contract. Furthermore, with the nullification of the exemption, the above requirements shall be effective. The Contractor shall notify the Government, as soon as the Contractor's or the subcontractors' facility is listed for having given rise to a criminal conviction noted in 40 CFR, Part 15.20.

W. SUBMITTALS AND REQUEST FOR INFORMATION (RFI'S). The Contractor shall submit an RFI within five (5) business days of an event or question of fact arising under the Contract. The PW Supervisor in charge of the project shall have ten (10) business days to respond to an RFI or any Submittal required to be made under the Contract.

X. COMPLIANCE WITH THE CITY'S INTEGRATED PEST MANAGEMENT POLICY: The Contractor shall follow the requirements of the City's Integrated Pest Management (IPM) Policy to ensure the City is in compliance with its Municipal Regional Stormwater NPDES Permit, Order No. R2-2009-0074, issued by the California Regional Water Quality Control Board. Contractor shall follow the City's IPM Policy and utilize generally accepted IPM Best Management Practices (BMPs) to the maximum extent practicable for the control or management of pests in and around City buildings and facilities, parks and golf courses, urban landscape areas, rights-of-way, and other City properties.

Contractor will ensure that applicators will use the most current IPM technologies available to ensure the long-term prevention or suppression of pest problems and to minimize negative impacts on the environment, non-target organisms, and human health. Contractor will consider the options or alternatives listed below in the following order, before recommending the use of or applying any pesticide on City property:

1. No controls (e.g., tolerating the pest infestation, use of resistant plant varieties or allowing normal life cycle of weeds)
2. Physical or mechanical controls (e.g., hand labor, mowing, exclusion)
3. Cultural controls (e.g., mulching, disking, alternative vegetation), good housekeeping (e.g. cleaning desk area)
4. Biological controls (e.g., natural enemies or predators)
5. Reduced-risk chemical controls (e.g., soaps or oils)
6. Other chemical controls

Contractor shall ensure that only appropriate licensed applicators who are authorized and trained in pesticide application and who shall implement the City department's IPM standard operating procedures may apply pesticides to or within City property.

Restricted Chemicals

The term pesticide applies to herbicides, insecticides, fungicides, rodenticides and other substances used to control pests. Antimicrobial agents are not included in this definition of pesticides.

Contractor shall avoid the use of pesticides that threaten water quality, human health and the environment. Thus, the Contractor shall not use or promote the use of the following chemicals:

1. Acute Toxicity Category I chemicals as identified by the Environmental Protection Agency (EPA),
2. Organophosphate pesticides (e.g., those containing Diazinon, chlorpyrifos or malathion)
3. Pyrethroids (bifenthrin, cyfluthrin, beta-cyfluthrin, cypermethrin, deltamethrin, esfenvalerate, lambda-cyhalothrin, permethrin, and tralomethrin),
4. Carbamates (e.g., carbaryl),
5. Fipronil,
6. Copper-based pesticides unless:
    a) Their use is judicious,
    b) Other approaches and techniques have been considered, and;
    c) Threat of impact to water-quality is prevented.

General Pesticide Usage Practices

Contractor shall ensure implementation of the following practices:

1. All pesticide applications shall be performed according to the manufacturer's instructions as detailed on the product label, and in accordance with all applicable state and local laws and regulations set forth to protect the environment, the public, and the applicator; and properly dispose of unused pesticides and their containers.
2. Pesticides that are not approved for aquatic use will not be applied to areas immediately adjacent to water bodies where through drift, drainage, or erosion, there is a reasonable possibility of a pesticide being transported into surface water.
3. Applicators will always avoid applications of pesticides that directly contact water, unless the pesticide is registered under Federal and California law for aquatic use.
4. Obtain coverage under the Statewide General NPDES Permit prior to discharging pollutants from the use of aquatic pesticides directly to the waters of the United States, or onto aquatic plants growing in waters of the United States (as required by the State Water Quality Resources Control Board).

Posting of Warning Notices Prior to Pesticide Application

1. If a pesticide with a "Warning" or "Danger" label indicator must be applied, the Contractor shall post sufficient copies of warning notices (Notice of Scheduled Chemical Application for Pest Management) and MSDS to effectively alert the public (i.e., at all entrances to a building) no less than 48 hours in advance of the pesticide application. The warning notice must be completely filled out, including name of the pesticide (both chemical and brand name), time and date of application, and with a fully legible re-entry time.

Annual Pesticide Use Summary Report

Contractor shall track pesticide use on City properties and provide an annual pesticide use summary report of pesticide application on City properties. The annual pesticide use summary report shall be submitted to the City's Public Works Department Clean Water Program staff by a date to be determined in the scope of work and shall include the following information:

1. Product name and manufacturer
2. Active ingredient
3. The total quantity of each pesticide used during the prior fiscal year (from July 1 to June 30)
4. Target pest(s) for pesticide application(s).
5. Reasons for increases in use of pesticides that threaten water quality, specifically organophosphorous pesticides, pyrethroids, carbamatesl, fipronil, and copper-based pesticides.

Best Management Practices (BMPs)

To protect water quality, the Contractor shall implement the BMPs and control measures described below:

1. Follow all federal, state, and local laws and regulations governing the use, storage, and disposal of pesticides and training of pest control advisors and applicators.
2. Use the most effective, least toxic pesticides that will do the job, provided there is a choice. The agency will take into consideration the LD50, overall risk to the applicator, and impact to the environment (chronic and acute effects).
3. Apply pesticides at the appropriate time to maximize their effectiveness and minimize the likelihood of discharging pesticides in stormwater runoff. Avoid application of pesticides if rain is expected (this does not apply to the use of pre- emergent herbicide applications when required by the label for optimal results.)
4. Employ techniques to minimize off-target application (i.e. spray drift) of pesticides, including consideration of alternative application techniques. For example, when spraying is required, increase drop size, lower application pressure, use surfactants and adjuvants, use wick application, etc.
5. Apply pesticides only when wind speeds are low.
6. Mix and apply only as much material as is necessary for treatment. Calibrate application equipment prior to and during use to ensure desired application rate.
7. Do not mix or load pesticides in application equipment adjacent to a storm drain inlet, culvert, or watercourse.
8. Properly inspect applicator equipment to prevent accidental pesticide leaks, spills and hazards to applicators and the environment.
9. Meet local fire department and Alameda County Agricultural Commissioner storage requirements for pesticide products. Provide secondary containment for liquids if required.
10. Prepare spill kits, store the kits near pesticides, and train employees to use them.
11. Store pesticides and other chemicals indoors in a locked and posted storage unit, as per California Code of Regulations.
12. Store pesticides in labeled containers, as per California Code of Regulations.
13. Rinse empty pesticide/herbicide containers, and empty in the spray, as per California Code of Regulations.

14. Dispose of triple-rinsed empty pesticide containers according to recommendations of the Alameda County Agricultural Commissioner and the manufacturer.
15. Try to find a qualified user for any unwanted pesticides, or return to the manufacturer if unopened. If disposal is required, contact Alameda County's Household Hazard Waste Collection Program at (510) 670-6460 between 8:30 AM and 5:00 PM., Monday through Friday, to make appropriate disposal arrangements, or to recycle the material.
16. If changing pesticides or cleaning spray tanks, use tank rinse water as the product, over a targeted area within the application site.
17. Irrigate slowly to prevent runoff, and do not over-water.

SECTION III. SCOPE OF WORK

A. WORK TO BE DONE. The work to be done consists of furnishing all labor, tools, equipment, materials, implementing BMP's, except as herein specified, and doing all work associated with updating the CCTV system at the Alameda Civic Center Parking Structure, located at 1416 Oak Street, Alameda, CA.

The Notice to Proceed (NTP) for this project is tentatively scheduled to be issued in late May 2015.

The Contractor shall have 30 consecutive working days from the date the work is to commence pursuant to the Notice to Proceed to complete the work.

The work involves the installation of a new CCTV system with 29-35 new cameras, two 4-channel video encoders, two servers with 30-40 days of storage per server, redundant power supplies and unlimited connection licenses along with one 24" monitor and POE switches. The new installation will utilize existing CAT5 cables and adopt up to six existing analog cameras, train staff on new software, position and secure new cameras while providing vandal proof anchors, manufacturer recommended power supply, and optimizing locations for maximum security operations. Remote access to CCTV via application and continued online support for the new cameras and hardware. The removal and replacement of existing non-conforming cameras and equipment including encoders, servers at the civic center parking structure while using existing approved wiring. The new CCTV system shall be tested and approved by regulatory agencies and/or the City of Alameda Police Department Property Crimes Division. Contractor shall train City staff on the proper operation of the new CCTV system and coordinate with the City's current monitoring contractor. The work consists of, but is not limited to, coordination with the City of Alameda Police Department staff; providing CCTV plans and specifications for permit (three sets, if required) with the Building and Planning Department; upgrading/optimizing camera locations and restoring site to like kind prior to the commencement of the upgrade. Contractor shall implement best management practices (BMPs) during the entire term of the project. In addition, the contractor will secure the worksite at all times and accommodate City staff and the general public accordingly during this upgrade project. **Project location is: Alameda Civic Center Parking Structure, 1416 Oak Street, Alameda, CA 94501**

Contractor will provide license, labor, materials, services, skills, supervision, and necessary tools and equipment to insure that all work is executed in a professional workmanship manner. Contractor shall have the capability to perform and complete the services in all respects in accordance with the solicitation documents. Contractor hereby warrants that all services shall be performed in a timely and first-class workmanlike manner. Contractor shall keep the property and equipment free and clear at all times of litter and interferences. All materials, preparation and workmanship shall conform to the requirements of Standards for (Public Works Construction Inc.) latest version, and CSI and manufacturer specifications. Contractor shall provide the following services within the boundaries of the facility:

Remedial / Description
Contractor shall verify all field measurements prior to ordering materials and miscellaneous supplies, and verify measurements as all structural measurements are factor-sized to fit as detailed in the plans (when provided). Procure all material prior to commencement of work. Supplies are available through local construction vendors as specified within CCTV manufacturer.

Demolition/Removal
Remove existing selected cameras/system only after all the upgrades to the system are complete so as not to disable the existing CCTV system or trigger unnecessary alarms and/or coordinating and securing prior written approval from all impacted agencies/parties such as the APD, or elevator contractor. Implementing BMPs the contractor will provide dust and noise protection to private and public property and secure the opening during transition time of the installation of the new CCTV system as per proposed work plan and posting 'Closure' as permitted by the Public Works representative and/or APD Representative. Contractor shall clean and remove debris from the work site daily.

Preparation
On a daily basis Contractor shall fully complete all work begun. Provide work plan and specifications with approval by Public Works prior to dismantling the existing system and not prior to Police approval of the proposed work plan. Confirm security operations with the APD Property Division well in advance to offset any possible delays. Contractor shall responsibly dispose of spoils by not utilizing the existing receptacles in the building but by planning offsite disposal. Contractor shall post approved closure and "No Parking" signage for staging material and supplies. Contractor is responsible for inspecting and ensuring the current wiring and CCTV system infrastructure is up to current Building Code and operating properly and mitigating faulty or subpar wiring and CCTV infrastructure accordingly. Contractor shall respond to any and all complaints from City staff.

Installation
Contractor shall install and provide the new CCTV system with proper equipment or equivalent as follows:

All Cameras have 3-9MM lenses

1. 2 - 20TB Raid5 Server
2. 2 secondary redundant power supplies
3. 2 16-channel enterprise w/unlimited client connections
4. 3 compact wall mount for pendant camera
5. 3 pole mount adapter for pendant mount
6. 1 1MP mini micro dome
7. 2 4-channel video encoder
8. 24 3.0 megapixel day/night outdoor dome
9. 4 1MP outdoor dome
10. 1 24 Port POE switch
11. 2 8 port POE switch
12. 1 24 inch LCD monitor

13. 1 all necessary hardware for securing the system
14. All Networking conversion

All additional wiring and necessary hardware to complete the project will be the contractor's responsibility during the entire term of the upgrade. Contractor shall provide to the City Representative the approved final inspections and will train City Staff on the operation of every single component of the upgraded system. Contractor shall keep work sites clean, remove debris, and properly dispose of spoils.

B. MEASUREMENTS AND PAYMENT. The work to be done shall be included in the service, repairs and updates in the Lump Sum price and all related services and consist of furnishing all labor, licensing, permits, vehicles, tools, equipment, materials, parts, components, except as herein specified, and doing all the work associated with updating the CCTV system at the Alameda Civic Center Parking Structure, located at 1416 Oak Street, Alameda, CA.

1. Payment shall be at the Lump Sum price for Demolition/Removal of existing CCTV and components and applying BMPs during the course of the project. Such payment shall include full compensation for furnishing all labor, tools, equipment, mobilization, materials, meetings, and doing all the work necessary for updating the CCTV system at the Alameda Civic Center parking structure, complete and in place.

2. Payment shall be at the Lump Sum price for Preparation, Purchase, Upgrade CCTV Infrastructure to code, staging, and securing. Such payment shall include full compensation for furnishing all labor, tools, equipment, mobilization, materials, meetings and doing all the work necessary for updating the CCTV system at the Alameda Civic Center parking structure, complete and in place.

3. Payment shall be at the Lump Sum price for Installation, Applied CSI/Manufacturer Specifications and Final Clean Up. Such payment shall include full compensation for furnishing all labor, tools, equipment, mobilization, materials, meetings, and doing all the work necessary for updating the CCTV system at the Alameda Civic Center parking structure, complete and in place.

4. Payment shall be made for the actual cost of the permit.

C. Contractor shall not work during City holidays. Remaining City holidays for 2015 include:

Memorial Day	Monday, May 25, 2015
Independence Day	Friday, July 3, 2015
Labor Day	Monday, September 7, 2015
Veteran's Day	Wednesday, November 11, 2015
Thanksgiving Day	Thursday, November 26, 2015
Day after Thanksgiving Day	Friday, November 27, 2015
Christmas Day	Friday, December 25, 2015

D. CLEAN UP. Contractor shall leave the work site in an acceptable clean manner at the end of each work day. Upon completion and before making application for acceptance of the work, the Contractor shall clean the street or road, borrow pits, and all ground occupied by the Contractor in connection with the work, of all rubbish, excess materials, temporary structures, and equipment; and all parts of the work shall be left in a neat and presentable condition.

SECTION IV. CONTROL

A. AUTHORITY OF THE PW SUPERVISOR. The PW Supervisor shall decide all questions which may arise as to the quality or acceptability of materials furnished and work performed; the manner of performance and rate of progress of the work; the interpretation of the plans and specifications; the acceptable fulfillment of the contract on the part of Contractor; and all questions as to claims and compensation.

The PW Supervisor's decision shall be final and he/she shall have executive authority to enforce and make effective such decisions and orders that the Contractor fails to carry out promptly.

B. PLANS. All authorized alterations affecting the requirements and information given on the approved plans shall be in writing. No changes shall be made to any plans or drawings after the same have been approved by the PW Supervisor, except by direction of the PW Supervisor.

C. SUPERINTENDENCE. Whenever the Contractor is not present on any part of the work where it may be desired to give directions, orders will be given by the PW Supervisor in writing and shall be received and obeyed by the superintendent or foreman in charge of the particular work in reference to which orders are given.

D. INSPECTION. The PW Supervisor shall at all times have access to the work during construction and shall be furnished with every reasonable facility for ascertaining full knowledge respecting the progress, workmanship, and character of materials used and employed in the work.

The Contractor shall give at least 48 hours notice in writing when he will require inspection on subgrade, formwork, concrete paving, etc. Inspection will routinely be carried out at pre-scheduled time established at the pre-construction meeting. Inspection will only be carried out for substantial quantities of work ready for inspection.

Whenever the Contractor varies the period during which work is carried on each day, he shall give due notice to the PW Supervisor, so that proper inspection may be provided. Any work done in the absence of the PW Supervisor is subject to rejection.

The inspection of the work shall not relieve the Contractor of any of his/her obligations to fulfill the contract as prescribed. Defective work shall be made good and unsuitable materials may be rejected, notwithstanding the fact that such defective work and unsuitable materials have been previously overlooked by the PW Supervisor and accepted or estimated for payment.

Working hours in the field are restricted to 8 AM through 5 PM, Monday through Thursday, excluding City Holidays, and shall constitute "normal working hours." The Public Works Department Inspectors work on Friday's and can be reached at 510-747-7900. In some locations, as noted on the Plans, normal working hours may be further restricted to avoid traffic and/or school-related conflicts. Any work in the field performed outside of these hours, including but not limited to construction, clean up, placement of traffic control devices, and mobilization/demobilization, shall be subject to removal and the Contractor fined $5,000 per incident, unless such work has been previously authorized by the PW Supervisor in writing.

Inspection hours for construction shall be from 8 AM through 4 PM, Monday through Thursday, excluding City Holidays, and shall constitute "normal inspection hours." The Public Works Department Inspectors work on Friday's and can be reached at 510-747-7900. Unless prior written authorization has been received from the PW Supervisor, the Contractor shall not perform any work outside of these hours except for general clean up, demobilization, and placement of no-parking signs. The Contractor shall pay the salary and benefits, including overtime, of the City employee(s) for inspection of any work performed outside of the normal inspection hours. Projects financed in whole or in part with state funds shall be subject to inspection at all times by the Director of Public Works of the State of California, or his agents.

E. REMOVAL OF DEFECTIVE AND UNAUTHORIZED WORK. All work which is defective in its construction or deficient in any of the requirements of these specifications shall be remedied, or removed and replaced by the Contractor in an acceptable manner and no compensation will be allowed for such correction.

Any work done beyond the lines and grades shown on the plans or established by the PW Supervisor, or any extra work done without written authority, shall be considered as unauthorized and will not be paid for.

Upon failure on the part of the Contractor to comply forthwith with any order of the PW Supervisor made under the provisions of this article, the PW Supervisor shall have the authority to cause defective work to be remedied, or removed and replaced, and unauthorized work to be removed, and to deduct the cost thereof from any monies due or to become due the Contractor.

The fact that the work and materials have been inspected from time to time, and payments on account have been made, does not relieve the Contractor from the responsibility of replacing and making good any defective work or materials that may be discovered within one year from the date of the completion of the work by the Contractor and its acceptance by the City.

F. FINAL INSPECTION. Whenever the work provided and contemplated by the contract shall have been satisfactorily completed, the PW Supervisor will make the final inspection.

G. FINAL GUARANTEE. It is understood that the Contractor is skilled in the trade or calling necessary to perform the work set forth within the plans and specifications, and that the City of Alameda, not being skilled in such matters, relies upon the Contractor to do and perform all work, acts, and things necessary to carry out the contract in the most skilled and desirable manner, and the Contractor guarantees the workmanship and materials to be the best of their kind. The acceptance of any part or of the whole of the work by the City does not operate to release the Contractor or the Contractor's surety from said guarantee.

The Contractor shall be held responsible for and must make good any defects through faulty, improper or inferior workmanship or materials arising from or discovered in any part of the contract work within one year of the completion and acceptance of the same. The bond for faithful performance, furnished by the Contractor, shall cover such defects and protect the City of Alameda against any and all such defects.

Nothing in this section supersedes contractor obligations for repair and replacement of work pursuant to the Public Contract Code.

SECTION V. MEASUREMENTS AND PAYMENT

A. MEASUREMENTS AND PAYMENT. Payment for work done under the contract shall be made on the basis of the sums as calculated from the finally measured quantities of work done and the agreed unit and lump sum prices. Payment shall be full compensation for furnishing all labor, materials, tools and equipment and doing all the work necessary to construct the items for which payment is being made, complete in place as shown on the plans and described in the specifications.

Payment of all, or any part, of an estimate in writing may be withheld on account of any of the following:

1. Defective work not remedied;
2. Third-party claims against Contractor or City arising from the acts or omissions of Contractor or subcontractors;
3. Stop Notices;
4. Failure of Contractor to make timely payments due to subcontractors for material or labor;
5. Damage to the City or others for which Contractor is responsible;
6. Failure of Contractor to maintain, update, and submit record documents;
7. Failure of Contractor to submit schedules or their updates as required by the Contract Documents;
8. Performance of the work by Contractor without properly processed shop drawings;
9. Liquidated damages assessed;
10. Any other failure of Contractor to perform its obligations under the Contract Documents.

SECTION VI. QUANTITIES

The following preliminary estimate of the quantities of work to be done and materials to be furnished is approximate only, and the City of Alameda does not expressly or by implication agree that the actual amount of work will correspond therewith, but reserves the right to increase or decrease the amount of any class or portion of the work or to omit portions of the work that may be deemed necessary or expedient to the PW Supervisor.

Quantities shall be determined by the Contractor from plans and specifications, and /or pre-construction meeting and walk - through. The basis of award of contract shall be by the City of Alameda for the lowest and best bid that will best serve the City's need. The contract may be awarded at the discretion of the City or depending on available funding.

The City reserves the right to reject any, any portion, or all bids.

TABULATION OF PRELIMINARY ESTIMATE OF QUANTITIES

Item No.	Description	Quantity	Unit
1.	Demolition / Removal of Existing CCTV and Components	1	Lump Sum
2.	Preparation, Purchase Upgrade CCTV Infrastructure to Code staging, and Securing	1	Lump Sum
3.	Installation, Applied CSI / Manufacturer Specifications and Final Clean Up	1	Lump Sum
4.	Permits	1	Allowance

SECTION VII. CONSTRUCTION DETAILS

The construction details covered under this Section VII shall be Special Provisions.

A. MAINTAINING TRAFFIC. Attention is directed to Section 7-1.08, "Public Convenience", 7-1.09, "Public Safety", of the State of California Standard Specifications, and to Section II, Article O of these specifications.

B. EXTENT OF CONTRACT. The Contractor shall furnish all labor, material has herein specified, tools and equipment necessary and shall do all the work necessary to construct and put in complete order for use the construction project contemplated by these specifications, the various items, and in the approximate quantities tabulated in Exhibit A.

Exhibit ‘A’

BIDDER’S PROPOSAL FORM

Bidder’s Proposal

Subcontractors to be used in the Performance of this Contract (Form)

Security For Compensation Certificate

Important Instructions

EXHIBIT "A"

BIDDER'S PROPOSAL

UPDATE CCTV SYSTEM AT THE ALAMEDA CIVIC CENTER PARKING STRUCTURE
(1416 Oak Street, Alameda, CA)
No. P.W. 05-15-09

SCOPE OF WORK:

The work involves the installation of a new CCTV system with 29-35 new cameras, two 4-channel video encoders, two servers with 30-40 days of storage per server, redundant power supplies and unlimited connection licenses along with one 24" monitor and POE switches. The new installation will utilize existing CAT5 cables and adopt up to six existing analog cameras, train staff on new software, position and secure new cameras while providing vandal proof anchors, manufacturer recommended power supply, and optimizing locations for maximum security operations. Remote access to CCTV via application and continued online support for the new cameras and hardware. The removal and replacement of existing non-conforming cameras and equipment including encoders, servers at the civic center parking structure while using existing approved wiring. The new CCTV system shall be tested and approved by regulatory agencies and/or the City of Alameda Police Department Property Crimes Division. Contractor shall train City staff on the proper operation of the new CCTV system and coordinate with the City's current monitoring contractor. The work consists of, but is not limited to, coordination with the City of Alameda Police Department staff; providing CCTV plans and specifications for permit (three sets, if required) with the Building and Planning Department; upgrading/optimizing camera locations and restoring site to like kind prior to the commencement of the upgrade. Contractor shall implement best management practices (BMPs) during the entire term of the project. In addition, the contractor will secure the worksite at all times and accommodate City staff and the general public accordingly during this upgrade project. **Project location is: Alameda Civic Center Parking Structure, 1416 Oak Street, Alameda, CA 94501**

Contractor will provide license, labor, materials, services, skills, supervision, and necessary tools and equipment to insure that all work is executed in a professional workmanship manner. Contractor shall have the capability to perform and complete the services in all respects in accordance with the solicitation documents. Contractor hereby warrants that all services shall be performed in a timely and first-class workmanlike manner. Contractor shall keep the property and equipment free and clear at all times of litter and interferences. All materials, preparation and workmanship shall conform to the requirements of Standards for (Public Works Construction Inc.) latest version, and CSI and manufacturer specifications. Contractor shall provide the following services within the boundaries of the facility:

Remedial / Description
Contractor shall verify all field measurements prior to ordering materials and miscellaneous supplies, and verify measurements as all structural measurements are factor-sized to fit as detailed in the plans (when provided). Procure all material prior to commencement of work. Supplies are available through local construction vendors as specified within CCTV manufacturer.

Demolition/Removal
Remove existing selected cameras/system only after all the upgrades to the system are complete so as not to disable the existing CCTV system or trigger unnecessary alarms and/or coordinating and securing prior written approval from all impacted agencies/parties such as the APD, or elevator contractor. Implementing BMPs the contractor will provide dust and noise protection to private and public property and secure the opening during transition time of the installation of the new CCTV system as per proposed work plan and posting 'Closure' as permitted by the Public Works representative and/or APD Representative. Contractor shall clean and remove debris from the work site daily.

Preparation
On a daily basis Contractor shall fully complete all work begun. Provide work plan and specifications with approval by Public Works prior to dismantling the existing system and not prior to Police approval of the proposed work plan. Confirm security operations with the APD Property Division well in advance to offset any possible delays. Contractor shall responsibly dispose of spoils by not utilizing the existing receptacles in the building but by planning offsite disposal. Contractor shall post approved closure and "No Parking" signage for staging material and supplies. Contractor is responsible for inspecting and ensuring the current wiring and CCTV system infrastructure is up to current Building Code and operating properly and mitigating faulty or subpar wiring and CCTV infrastructure accordingly. Contractor shall respond to any and all complaints from City staff.

Installation
Contractor shall install and provide the new CCTV system with proper equipment or equivalent as follows:

All Cameras have 3-9MM lenses -

1. 2 - 20TB Raid5 Server
2. 2 secondary redundant power supplies
3. 2 16-channel enterprise w/unlimited client connections
4. 3 compact wall mount for pendant camera
5. 3 pole mount adapter for pendant mount
6. 1 1MP mini micro dome
7. 2 4-channel video encoder
8. 24 3.0 megapixel day/night outdoor dome
9. 4 1MP outdoor dome
10. 1 24 Port POE switch
11. 2 8 port POE switch

12. 1 24 inch LCD monitor
13. 1 all necessary hardware for securing the system
14. All Networking conversion

All additional wiring and necessary hardware to complete the project will be the contractor's responsibility during the entire term of the upgrade. Contractor shall provide to the City Representative the approved final inspections and will train City Staff on the operation of every single component of the upgraded system. Contractor shall keep work sites clean, remove debris, and properly dispose of spoils.

BIDDER'S PROPOSAL
UPDATE CCTV SYSTEM AT ALAMEDA CIVIC CENTER PARKING STRUCTURE
(1416 Oak Street, Alameda, CA 94501) No. P.W. 05-15-09

Item No.	Approximate Quantity	Items with Unit Prices Written in Words	Unit Price	Total Price
1.	1 LS	Demolition / Removal of Existing CCTV and Components, Applying BMPs. @_____ _____ Per Lump Sum	$_____	$_____
2.	1 LS	Preparation, Purchase Upgrade CCTV Infrastructure to Code, Staging, and Securing @_____ _____ Per Lump Sum	$_____	$_____
3.	1 LS	Installation, Applied CSI/ Manufacturer Specifications and Final Clean Up @_____ _____ Per Lump Sum	$_____	$_____
4.	Allowance	Permits @ One Thousand Dollars Allowance	$1,000.00	$1,000.00

TOTAL BID: $_____

The undersigned agrees to execute the contract required in said Specifications, to the satisfaction of the Council of the City of Alameda, with the necessary bonds, if any be required, within ten days, not including Sundays or legal holidays, after receiving notice that the contract has been awarded and is ready for signature; and further agrees that, in case of his default in any of the foregoing provisions, the proceeds of any check which may accompany his bid in lieu of a bid bond shall become the property of the City of Alameda as agreed and liquidated damages.

Firm Name (Please Print)_____

Signature of Person on Behalf of Firm _____

Business Address _____

City, State, Zip _____

Dated: _____ Phone No _____

Name	Title	Address
(Of Officers or Partners)		

Incorporated under the laws of the State of _____

Contractor's License No. _____ Expiration Date: _____

Department of Industrial Relations (DIR) No.: _____

The signature above certifies that the foregoing information given on this document is true and correct under penalty of perjury. (Section 7028.15 California Business and Professionals Code.)

PROPOSED SUBCONTRACTOR FORM

The Bidder shall list the name, address, license number and Department of Industrial Relations number of each subcontractor to whom the Bidder proposes to subcontract portions of the work, as required by the provisions in Section 2-1.054, "Required Listing of Proposed Subcontractors," of the Standard Specifications and Section 2-1.01, "General," for the special provisions.

COMPANY NAME	CA LICENSE NO.	BUSINESS ADDRESS	DESCRIPTION OF WORK	DIR NO.

(This form may be duplicated if necessary to list additional subcontractors)

The bidder's execution on the signature portion of this proposal shall also constitute an endorsement and execution of those certifications which are a part of this proposal)

EQUAL EMPLOYMENT OPPORTUNITY CERTIFICATION

The bidder _____, proposed subcontractor , hereby certified that he has ___, has not ___, participated in a previous contract or subcontract suject to the equal opportunity clauses, as required by Executive Orders 10925, 11114, or 11246, and that, where required, he has filed with the Joint Reporting Committee, the Director of the Office of Federal Contract Compliance, a Federal Government contracting or administering agency, or the former President's Committee on Equal Employment Opportunity, all report due under the applicable filling requirements.

NOTE: The above certification is required by the Equal Employment Opportunity Regulations of the Secretary of Labor (41 CFR 60-1.7(b)(1)), and must be submitted by bidders and proposed subcontractors only in connection with contracts and subcontracts which are subject to the equal opportunity clause. Contracts and subcontracts which are exempt from the equal opportunity clause are set forth in 41 CFR 60-1.5. (Generally only contracts or subcontracts of $10,000 or under are exempt.)

Currently, Standard Form 100 (EEO-1) is the only report required by the Executive Orders or their implementing regulations.

Proposed prime contractors and subcontractors who have participated in a previous contract or subcontract subject to the Executive Orders and have not filed the required reports should note that 41 CFR 60-1.7(b)(1) prevents the award of contracts and subcontracts unless such contractor submits a report covering the delinquent period or such other period specified by the Federal Highway Administration or by the Director, Office of Federal Contract Compliance, U.S. Department of Labor.

SECURITY FOR COMPENSATION CERTIFICATE

(Required by Paragraph 1861, California Labor Code)

To:

_____

I am aware of the provisions of Section 3700 of the Labor Code of the State of California which requires every employer to be insured against liability for worker's compensation or to undertake self-insurance in accordance with the provisions of that Code, and I will comply with such provisions before commencing the performance of the work of this contract.

_____

_____

_____
(Signature of Bidder)

_____

_____
Business Address

IMPORTANT INSTRUCTIONS

l. Any erasure or interlineation may invalidate bid.

2. If corporation is bidder, affix seal of corporation.

3. If bidder is:

(a) An individual doing business under his own name, sign his own name only.

(b) An individual using a firm name, sign: Example, "John Doe, an individual doing business as Blank Company."

(c) A co-partnership, sign: Example, "Blank Company, by John Doe, President" (or other title).

4. If a firm or co-partnership, give the names of all individual co-partners composing the firm. If a corporation, state legal name of corporation; also name of president, secretary and treasurer thereof.

5. If a bid is sent by mail, write the word "Proposal" plainly on the envelope.

Exhibit ‘B’

CERTIFIED PAYROLL AND PREVAILING WAGES FORMS

Contractor’s Certification Concerning Labor Standards and Prevailing Wage Requirements

Subcontractor’s Certification Concerning Labor Standards and Prevailing Wage Requirements

Certification of Bidder Regarding Section 3 and Segregated Facilities

Certification of Proposed Subcontractor Regarding Section 3 and Segregated Facilities

Certification of Understanding and Authorization

Certification For Applicable Fringe Benefit Payments

Authorization for Deductions

EXHIBIT B: Certified Payroll Forms

CITY OF ALAMEDA PUBLIC WORKS DEPARTMENT CONTRACTOR'S CERTIFICATION CONCERNING LABOR STANDARDS AND PREVAILING WAGE REQUIREMENTS	
(Appropriate Recipient):	DATE
c/o	PROJECT NUMBER (if any)
	PROJECT NAME

1. The undersigned, having executed a contract with

   _____ for the construction of the above-identified project acknowledges that:

   (a) The Labor Standards provisions are included in the aforesaid contract;

   (b) Correction of any infractions of the aforesaid conditions, including infractions any of his subcontractors and Any lower tier subcontractor, is his responsibility.

2. He certifies that:

   (a) Neither he nor any firm, partnership or association in which he has substantial interest is designated as an ineligible contractor by the Comptroller General of the United States pursuant to Section 5.6(b) of the Regulations of the Secretary Labor, part 5 (29 CFR, Part 5) or pursuant to Section 3(a) of the Davis-Bacon Act as amended (40 U.S.C. 276u-2(a)).

   (b) No part of the aforementioned contract has been or will be subcontracted to any subcontractor if such subcontractor or any firm, corporation, partnership or association in which such subcontractor has a substantial interest is designated an ineligible contractor pursuant to any of the aforementioned regulatory or statutory provisions.

He agrees to obtain and forward to the aforementioned recipient within ten days after the execution of any subcontract, including those executed by his subcontractors and any lower tier subcontractors, a Subcontractor's Certification Concerning Labor Standards at Prevailing Wage Requirements executed by the subcontractors.

He certified that:

(a) The legal name and the business address of the undersigned are:

(b) The undersigned is:

(1) A SINGLE PROPRIETORSHIP	(3) A CORPORATION ORGANIZED IN THE STATE OF
(2) A PARTNERSHIP	(4) OTHER ORGANIZATION (Describe)

(c) The name, title and address of the owner, partners or officers of the undersigned are:

NAME	TITLE	ADDRESS

EXHIBIT B: Certified Payroll Forms

(d) The names and address of all other persons, both natural and corporate, having a substantial interest in the undersigned, and the nature of the interest are (if none, so state):		
NAME	TITLE	ADDRESS

(e) The names, address and trade classification of all other building construction contractors in which the undersigned, has a substantial interest are (if none, so state):		
NAME	TITLE	ADDRESS

3. He certifies:
(a) The company's Federal Tax Identification Number is: (b) The ethnicity of the company's owner(s) is/are: (c) Is the company a female owned business: _____ Yes _____ No

Date _____ _____
(Contractor)

By _____
(Signature)

WARNING

U.S. Criminal Code, Section 1010, Title 18, U.S. C. Provides in part "Whoever ..makes, passes, utters, or publishes any statement, knowing the same to be false .shall be fined not more than $5,000 or imprisoned not more than two years or both."

EXHIBIT B: Certified Payroll Forms

CITY OF ALAMEDA
PUBLIC WORKS DEPARTMENT
SUBCONTRACTOR'S CERTIFICATION
CONCERNING LABOR STANDARDS AND PREVAILING WAGE REQUIREMENTS

(Appropriate Recipient):	DATE
c/o	PROJECT NUMBER (if any)
	PROJECT NAME

1. The undersigned, having executed a contract with

   _____ for

   in the amount of $_____ In the construction of the above-identified project, certifies that:

   (a) The Labor Standards provisions of the contract for construction are included in the aforesaid contract;

   (b) Neither he nor any firm, partnership or association in which he has substantial interest is designated as an ineligible contractor by the Comptroller General of the United States pursuant to Section 5.6(b) of the Regulations of the Secretary Labor, part 5 (29 CFR, Part 5) or pursuant to Section 3(a) of the Davis-Bacon Act as amended (40 U.S.C.. 276u-2(a)).

   (b) No part of the aforementioned contract has been or will be subcontracted to any subcontractor if such subcontractor or any firm, corporation, partnership or association in which such subcontractor has a substantial interest is designated an ineligible contractor pursuant to any of the aforementioned regulatory or statutory provisions.

2. He agrees to obtain and forward to the aforementioned recipient within ten days after the execution of any subcontract, including those executed by his subcontractors and any lower tier subcontractors, a Subcontractor's Certification Concerning Labor Standards at Prevailing Wage Requirements executed by the subcontractors.

   (a) The workmen will report for duty on or about _____(date).

3. He certifies that:

   (a) The legal name and the business address of the undersigned are:

   (b) The undersigned is:

   (1) A SINGLE PROPRIETORSHIP (3) A CORPORATION ORGANIZED IN THE STATE OF

   (2) A PARTNERSHIP (4) OTHER ORGANIZATION (Describe)

   (c) The name, title and address of the owner, partners or officers of the undersigned are:

NAME		ADDRESS

EXHIBIT B: Certified Payroll Forms

(d) The names and address of all other persons, both natural and corporate, having a substantial interest in the undersigned, and the nature of the interest are (if none, so state):		
NAME	TITLE	ADDRESS

(e) The names, address and trade classification of all other building construction contractors in which the undersigned, has a substantial interest are (if none, so state):		
NAME	TITLE	ADDRESS

3. He certifies:
(a) The company's Federal Tax Identification Number is: (b) The ethnicity of the company's owner(s) is/are: (c) Is the company a female owned business: _____ Yes _____ No

Date: _____ _____
(Contractor)

By _____
(Signature)

WARNING

U.S. Criminal Code, Section 1010, Title 18, U.S. C. Provides in part "Whoever .....makes, passes, utters, or publishes any statement, knowing the same to be false .....shall be fined not more than $5,000 or imprisoned not more than two years or both."

EXHIBIT B: Certified Payroll Forms

CERTIFICATION OF BIDDER REGARDING SECTION 3
AND SEGREGATED FACILITIES

_____ _____
Name of Prime Contractor Project Name and Number

The undersigned hereby certified that:

(a) Section 3 provisions are included in the Contract.

(b) A written Section 3 plan was prepared and submitted as part of the bid proceedings (if bid equals or exceeds $10,000).

(c) No segregated facilities will be maintained.

Name _____
Name and Title of Signer (Print or Type)

_____ _____
Signature Date

EXHIBIT B: Certified Payroll Forms

CERTIFICATION OF PROPOSED SUBCONTRACTOR REGARDING
SECTION 3 AND SEGREGATED FACILITIES

_____	_____
Name of Subcontractor	Project Name and Number

The undersigned hereby certified that:

(a) Section 3 provisions are included in the Contract.

(b) A written Section 3 plan was prepared and submitted as part of the bid proceedings (if bid equals or exceeds $10,000).

(c) No segregated facilities will be maintained, as required by Title VI of the Civil Right Act of 1964.

Name _____
Name and Title of Signer (Print or Type)

_____	_____
Signature	Date

EXHIBIT B: Certified Payroll Forms

CERTIFICATION OF UNDERSTANDING AND AUTHORIZATION

Project Name: _____

This is to certify that the principals, and the authorized payroll officer, below, have read and understand the Minutes of the Preconstruction Conference and the labor standards clauses pertaining to the subject project.

The following person(s) is designated as the payroll officer for the undersigned and is authorized to sign the Statement of Compliance which will accompany our weekly certified payroll reports for this project:

_____
Designated Payroll Officer (Name)

_____
Designated Payroll Officer (Signature)

_____
Authorized by (Contractor/Subcontractor)

_____
(Signature)

_____
(Title)

_____
(IRS) Employer Identification Number

_____
(Date)

EXHIBIT B: Certified Payroll Forms
CERTIFICATION FOR APPLICABLE FRINGE BENEFIT PAYMENTS

Project Name: _____

Classification/ Fringe Benefits Provided	Name, Address and Telephone Number of Plan/Fund/Program
1. _____ Health and Welfare	_____
_____ Pension	_____
_____ Vacation	_____
_____ Apprenticeship/Training	_____
2. _____ Health and Welfare	_____
_____ Pension	_____
_____ Vacation	_____
_____ Apprenticeship/Training	_____
3. _____ Health and Welfare	_____
_____ Pension	_____
_____ Vacation	_____
_____ Apprenticeship/Training	_____

OR: (Check if applicable)
_____ I certify that I do not make payments to approved fringe benefit plans, funds or programs.

_____ By	_____
Contractor/Subcontractor	Signature
_____	_____
Date	Title

EXHIBIT B: Certified Payroll Forms

AUTHORIZATION FOR DEDUCTIONS

The undersigned authorized deductions, as noted, to be made from their wages. It is understood that these deductions: (a) are in the interest of the employee; (b) is not a condition of employment; (c) there is no direct or indirect financial benefit accruing to the employee; and; (d) it is not otherwise forbidden by law.

Employee's Name	Employee's Signature	Date	Deduction

_____
Signature of Authorized Representative of Employee

_____
Authorized Representative's Name and Title

_____
Date

Exhibit 'C'

SAMPLE CONTRACT AGREEMENT/ ADDITIONAL INSURED CERTIFICATE

Sample of Contract Agreement

Additional Insured Certificates

EXHIBIT "C"

CONTRACTOR AGREEMENT

THIS AGREEMENT, entered into this _____ day of _____ 2015, by and between CITY OF ALAMEDA, a municipal corporation (hereinafter referred to as "City"), and _____, a (California corporation, partnership, sole proprietor, individual) whose address is _____ **(**hereinafter called the "Contractor"), in reference to the following:

RECITALS:

A. City is a municipal corporation duly organized and validly existing under the laws of the State of California with the power to carry on its business as it is now being conducted under the statutes of the State of California and the Charter of the City.

B. The CCTV system at the Alameda Civic Center Parking Structure (1416 Oak Street, Alameda, CA) needs to be upgraded. The City prepared plans and specification and reached out to Contractor's on the City's bidders list, builder's exchanges, and posted the plans and specifications on the City's webpage. Bids were opened on _____(date). We received _____ bids and chose the lowest responsive, responsible bidder per Administrative Order No. 5.

C. Provider possesses the skill, experience, ability, background, certification and knowledge to provide the services described in this Agreement on the terms and conditions described herein.

D. City and Contractor desire to enter into an agreement for updating the CCTV system at Alameda Civic Center Parking Structure, 1416 Oak Street, Alameda, CA, in accordance with Specifications, Special Provisions and Plans, adopted therefor No. P.W. 05-15-09 , and on file in the office of the Public Works Department.

NOW, THEREFORE, it is mutually agreed by and between the undersigned parties as follows:

1. **TERM**:

The term of this Agreement shall commence on the _____day of _____, 2015, and shall terminate on the _____ day of _____, 2015, unless terminated earlier as set forth herein.

2. **SERVICES TO BE PERFORMED**:

City and Contractor desire to enter into an agreement for updating the CCTV system at Alameda Civic Center Parking Structure, 1416 Oak Street, Alameda, CA, in accordance with Specifications, Special Provisions and Plans, adopted therefor No. P.W. , and on file in the office of the Public Works Department..

3. **COMPENSATION TO CONTRACTOR**:

Contractor shall be compensated for services performed pursuant to this Agreement in the amount and manner set forth in Contractor's bid, which is attached hereto as Exhibit "A" and incorporated herein by this reference. Payment will be made in the same manner that claims of a like character are paid by the City, with checks drawn on the treasury of said City, to be taken from CIP _____.

Payment will be made by the City in the following manner: On the first day of each month, Contractor shall submit a written estimate of the total amount of work done the previous month. However, the City reserves the right to adjust budget within and between tasks. Pricing and accounting of charges are to be according to the bid packet pricing, unless mutually agreed to in writing.

Payment shall be made for 95% of the value of the work completed as determined by the City. The City shall retain 5% of the value of the work as partial security for the completion of the work by Contractor. Retained amounts shall be paid to Contractor within sixty days of acceptance by the City of the project. Payment shall not be construed as acceptance of defective work. No interest will be paid to Contractor on retained funds.

Total compensation for work is $_____, with an _____ percent contingency in the amount of $_____ for a total not to exceed of $_____. Use of contingency shall be for items of work outside the original scope and requires prior written authorization by the City.

Prompt Payment Of Withheld Funds To Subcontractors: The City shall hold retainage from the prime contractor and shall make prompt and regular incremental acceptances of portions, as determined by the City of the contract work and pay retainage to the prime contractor based on these acceptances. The prime contractor or subcontractor shall return all monies withheld in retention from all subcontractors within 30 days after receiving payment for work satisfactorily completed and accepted including incremental acceptances of portions of the contract work by the City. Any delay or postponement of payment may take place only for good cause and with the City's prior written approval. Any violation of these provisions shall subject the violating prime contractor to the penalties, sanctions, and other remedies specified in Section 7108.5 of the California Business Professions Code. This requirement shall not be construed to limit or impair any contractual, administrative, or judicial remedies otherwise, available to the prime contractor or subcontractor in the event of a dispute involving late payment, or nonpayment by the contractor, or deficient subcontractor's performance, or noncompliance by a subcontractor. This clause applies to both DBE and non-DBE subcontractors.

4. **TIME IS OF THE ESSENCE:**

Contractor and City agree that time is of the essence regarding the performance of this Agreement.

5. **STANDARD OF CARE**:

Contractor agrees to perform all services hereunder in a manner commensurate with the prevailing standards of like professionals in the San Francisco Bay Area and agrees that all

services shall be performed by qualified and experienced personnel who are not employed by the City nor have any contractual relationship with City.

6. **INDEPENDENT PARTIES**:

Contractor hereby declares that it is engaged as an independent business and it agrees to perform its services as an independent contractor. The manner and means of conducting the work are under the control of Contractor, except to the extent they are limited by statute, rule or regulation and the express terms of this Agreement. No civil service status or other right of employment will be acquired by virtue of Contractor's services. None of the benefits provided by City to its employees, including but not limited to unemployment insurance, workers' compensation plans, vacation and sick leave are available from City to Contractor, its employees or agents. Deductions shall not be made for any state or federal taxes, FICA payments, PERS payments, or other purposes normally associated with an employer-employee relationship from any fees due Contractor. Payments of the above items, if required, are the responsibility of Contractor.

7. **IMMIGRATION REFORM AND CONTROL ACT (IRCA):**

Contractor assumes any and all responsibility for verifying the identity and employment authorization of all of its employees performing work hereunder, pursuant to all applicable IRCA or other federal, or state rules and regulations. Contractor shall indemnify, defend, and hold City harmless from and against any loss, damage, liability, costs or expenses arising from any noncompliance of this provision by Contractor.

8. **NON-DISCRIMINATION:**

Consistent with City's policy that harassment and discrimination are unacceptable employer/employee conduct, Contractor agrees that harassment or discrimination directed toward a job applicant, a City employee, or a citizen by Contractor or Contractor's employee on the basis of race, religious creed, color, national origin, ancestry, handicap, disability, marital status, pregnancy, sex, age, or sexual orientation will not be tolerated. Contractor agrees that any and all violations of this provision shall constitute a material breach of this Agreement.

9. **HOLD HARMLESS**:

Contractor shall indemnify, defend, and hold harmless City, its City Council, boards, commissions, officials, employees, and volunteers ("Indemnitees") from and against any and all loss, damages, liability, claims, suits, costs and expenses whatsoever, including reasonable attorneys' fees ("Claims"), arising from or in any manner connected to Contractor's negligent act or omission, whether alleged or actual, regarding performance of services or work conducted or performed pursuant to this Agreement. If Claims are filed against Indemnitees which allege negligence on behalf of the Contractor, Contractor shall have no right of reimbursement against Indemnitees for the costs of defense even if negligence is not found on the part of Contractor. However, Contractor shall not be obligated to indemnify Indemnitees from Claims arising from the sole negligence or willful misconduct of Indemnitees.

10. **INSURANCE**:

On or before the commencement of the terms of this Agreement, Contractor shall furnish City with certificates showing the type, amount, class of operations covered, effective dates and dates of expiration of insurance coverage in compliance with paragraphs 10A, B, C and D. Such certificates, which do not limit Contractor's indemnification, shall also contain substantially the following statement: "Should any of the above insurance covered by this certificate be canceled or coverage reduced before the expiration date thereof, the insurer affording coverage shall provide thirty (30) days' advance written notice to the City of Alameda by certified mail, "Attention: Risk Manager." It is agreed that Contractor shall maintain in force at all times during the performance of this Agreement all appropriate coverage of insurance required by this Agreement with an insurance company that is acceptable to City and licensed to do insurance business in the State of California. Endorsements naming the City, its City Council, boards, commissions, officials, employees, and volunteers as additional insured shall be submitted with the insurance certificates.

A. **COVERAGE**:

Contractor shall maintain the following insurance coverage:

(1) **Workers' Compensation**:

Statutory coverage as required by the State of California.

(2) **Liability**:

Commercial general liability coverage in the following minimum limits:

Bodily Injury:	$1,000,000 each occurrence
	$2,000,000 aggregate - all other
Property Damage:	$1,000,000 each occurrence
	$2,000,000 aggregate

If submitted, combined single limit policy with aggregate limits in the amounts of $2,000,000 will be considered equivalent to the required minimum limits shown above.

(3) **Automotive:**

Comprehensive automobile liability coverage (any auto) in the following minimum limits:

Bodily injury:	$1,000,000 each occurrence
Property Damage:	$1,000,000 each occurrence
or	
Combined Single Limit:	$2,000,000 each occurrence

B. **SUBROGATION WAIVER**:

Contractor agrees that in the event of loss due to any of the perils for which it has agreed to provide comprehensive general and automotive liability insurance, Contractor shall look solely to its insurance for recovery. Contractor hereby grants to City, on behalf of any insurer providing comprehensive general and automotive liability insurance to either Contractor or City with respect to the services of Contractor herein, a waiver of any right to subrogation which any

such insurer of said Contractor may acquire against City by virtue of the payment of any loss under such insurance.

C. **FAILURE TO SECURE**:

If Contractor at any time during the term hereof should fail to secure or maintain the foregoing insurance, City shall be permitted to obtain such insurance in the Contractor's name or as an agent of the Contractor and shall be compensated by the Contractor for the costs of the insurance premiums at the maximum rate permitted by law and computed from the date written notice is received that the premiums have not been paid.

D. **ADDITIONAL INSURED**:

City, its City Council, boards, commissions, officials, employees, and volunteers shall be named as an additional insured under all insurance coverages, except worker's compensation insurance. The naming of an additional insured shall not affect any recovery to which such additional insured would be entitled under this policy if not named as such additional insured. An additional insured named herein shall not be held liable for any premium, deductible portion of any loss, or expense of any nature on this policy or any extension thereof. Any other insurance held by an additional insured shall not be required to contribute anything toward any loss or expense covered by the insurance provided by this policy.

E. **SUFFICIENCY OF INSURANCE:**

Contractor shall furnish the following bonds from a bonding company acceptable to the City Attorney. Faithful Performance Bond and Labor and Material Bond are only required for work over $25,000. Therefore, those estimates that are under $25,000 will not need to budget for the bond premiums and those estimates over $25,000 will need to be sure to budget for the bond premiums.

The insurance limits required by City are not represented as being sufficient to protect Contractor. Contractor is advised to consult Contractor's insurance broker to determine adequate coverage for Contractor.

11. **BONDS**:

Contractor shall furnish the following bonds from a bonding company acceptable to the City Attorney:

A. **Faithful Performance**:

A bond in the amount of 100% of the total contract price guaranteeing the faithful performance of this contract, and

B. **Labor and Materials**:

A bond for labor and materials in the amount of 100% of the total contract price.

12. **PROHIBITION AGAINST TRANSFERS**:

Contractor shall not assign, sublease, hypothecate, or transfer this Agreement, or any interest therein, directly or indirectly, by operation of law or otherwise, without prior written consent of City. Any attempt to do so without said consent shall be null and void, and any assignee, sublessee, hypothecate or transferee shall acquire no right or interest by reason of such attempted assignment, hypothecation or transfer. However, claims for money by Contractor

from City under this Agreement may be assigned to a bank, trust company or other financial institution without prior written consent. Written notice of such assignment shall be promptly furnished to City by Contractor.

The sale, assignment, transfer or other disposition of any of the issued and outstanding capital stock of Contractor, or of the interest of any general partner or joint venturer or syndicate member or cotenant, if Contractor is a partnership or joint venture or syndicate or cotenancy, which shall result in changing the control of Contractor, shall be construed as an assignment of this Agreement. Control means fifty percent (50%) or more of the voting power of the corporation.

13. **SUBCONTRACTOR APPROVAL**:

Unless prior written consent from City is obtained, only those people and subcontractors whose names are listed in Contractor's bid shall be used in the performance of this Agreement.

Requests for additional subcontracting shall be submitted in writing, describing the scope of work to be subcontracted and the name of the proposed subcontractor. Such request shall set forth the total price or hourly rates used in preparing estimated costs for the subcontractor's services. Approval of the subcontractor may, at the option of City, be issued in the form of a Work Order.

In the event that Contractor employs subcontractors, such subcontractors shall be required to furnish proof of workers' compensation insurance and shall also be required to carry general and automobile liability insurance in reasonable conformity to the insurance carried by Contractor. In addition, any work or services subcontracted hereunder shall be subject to each provision of this Agreement.

14. **PERMITS AND LICENSES**:

Contractor, at its sole expense, shall obtain and maintain during the term of this Agreement, all appropriate permits, certificates and licenses, including a City Business License, that may be required in connection with the performance of services hereunder.

15. **REPORTS**:

Each and every report, draft, work product, map, record and other document reproduced, prepared or caused to be prepared by Contractor pursuant to or in connection with this Agreement shall be the exclusive property of City.

No report, information nor other data given to or prepared or assembled by Contractor pursuant to this Agreement shall be made available to any individual or organization by Contractor without prior approval by City.

Contractor shall, at such time and in such form as City may require, furnish reports concerning the status of services required under this Agreement.

16. **RECORDS**:

Contractor shall maintain complete and accurate records with respect to sales, costs, expenses, receipts and other such information required by City that relate to the performance of services under this Agreement.

Contractor shall maintain adequate records of services provided in sufficient detail to permit an evaluation of services. All such records shall be maintained in accordance with generally accepted accounting principles and shall be clearly identified and readily accessible. Contractor shall provide free access to such books and records to the representatives of City or its designees at all proper times, and gives City the right to examine and audit same, and to make transcripts therefrom as necessary, and to allow inspection of all work, data, documents, proceedings and activities related to this Agreement. Such records, together with supporting documents, shall be kept separate from other documents and records and shall be maintained for a period of three (3) years after receipt of final payment.

If supplemental examination or audit of the records is necessary due to concerns raised by City's preliminary examination or audit of records, and the City's supplemental examination or audit of the records discloses a failure to adhere to appropriate internal financial controls, or other breach of contract or failure to act in good faith, then Contractor shall reimburse City for all reasonable costs and expenses associated with the supplemental examination or audit.

17. **NOTICES**:

All notices, demands, requests or approvals to be given under this Agreement shall be given in writing and conclusively shall be deemed served when delivered personally or on the second business day after the deposit thereof in the United States Mail, postage prepaid, registered or certified, addressed as hereinafter provided.

All notices, demands, requests, or approvals from Contractor to City shall be addressed to City at:

City of Alameda
Public Works Department
Maintenance Service Center
1616 Fortmann Way
Alameda, CA 94501
Attention: Jesse Barajas, Public Works Superintendent
Ph: (510) 747-7900 / Fax: (510) 521-8762

All notices, demands, requests, or approvals from City to Contractor shall be addressed to Contractor at:

_____
_____
_____
_____
Ph: ( ) / Fax: ( )

18. **LAWS TO BE OBSERVED**.

The Contractor shall keep himself fully informed of all existing and future state and federal laws and all municipal ordinances and regulations of the City of Alameda which in any manner affect those engaged or employed in the work, or the materials used in the work, or which in any way affect the conduct of the work, and of all such orders and decrees of bodies or tribunals having any jurisdiction or authority over the same.

19. **DEPARTMENT OF INDUSTRIAL RELATIONS COMPLIANCE AND PREVAILING WAGE REQUIREMENTS ON PUBLIC WORKS PROJECTS**.

1. Effective January 1, 2015, no Contractor or Subcontractor may be listed on a bid proposal for a public works project (submitted after March 1, 2015) unless registered with the Department of Industrial Relations pursuant to Labor Code Section 1725.5 (with the limited exceptions from this requirement for bid purposed only under Labor code Section 1771.1(a)). Register at https://efiling.dir.ca.gov/PWCR

2. No Contractor or Subcontractor may be awarded a contract for public work on a public works project (awarded on or after April 1, 2015) unless registered with the Department of Industrial Relations pursuant to Labor Code Section 1725.5.

3. This project is subject to compliance monitoring and enforcement by the Department of Industrial Relations.

4. The Prime Contractor is required to post job site notices prescribed by regulations. See 8 Calif. Code Regulation §16451(d).

5. Effective April 1, 2015, All Contractors and Subcontractors must furnish electronic certified payroll records directly to the Labor Commissioner at: https://apps.dir.ca.gov/ecpr/das/altlogin

20. **PREVAILING WAGES**:

a. The Contractor is aware of the requirements of California Labor Code sections 1720 et seq. and 1770 et seq., as well as California Code of Regulations, Title 8, section 16000 et seq. ("Prevailing Wage Laws"), which require the payment of prevailing wage rates and the performance of other requirements on certain "public works" projects. Since this Project involves a "public work" project, as defined by the Prevailing Wage Laws, Contractor shall fully comply with such Prevailing Wage Laws. Contractor's failure to comply with the Prevailing Wage Law may constitute a default under the contract for performance of the Work which would entitle the City to rescind the contract or exercise other remedies as provided by law or the contract.

b. The Contractor shall obtain a copy of the prevailing rates of per diem wages at the commencement of this Contract from the website of the Division of Labor Statistics and Research of the Department of Industrial Relations located at www.dir.ca.gov/dlsr/. In the alternative, the Contractor may view a copy of the prevailing rates of per diem wages at the City's Public Works Department, Building 1, 950 W. Mall Square, Room 110, Alameda. The Contractor shall make copies of the prevailing rates of per diem wages for each craft,

classification or type of worker needed to perform work on the Project available to interested parties upon request, and shall post copies at the Contractor's principal place of business and at the Project site. The Contractor shall defend, indemnify and hold the City, its elected officials, officers, employees and agents free and harmless from any claims, liabilities, costs, penalties or interest arising out of any failure or allege failure to comply with the Prevailing Wage Laws and/or the City's Labor Compliance Program (hereinafter referred to as "LCP"), if any.

c. If this project is funded in whole or in part with Federal monies and subject to the provisions of the Davis-Bacon Act, the successful bidder shall pay not less than the wage rates determined by the Secretary of Labor. The Federal wage rates shall apply unless the State wage rates are higher. The Federal Wage Rates applicable to the contract are those current within ten (10) days of the bid due date.

d. The Contractor and all subcontractors shall pay and shall cause to be paid each worker engaged in work on the Project not less than the general prevailing rate of *per diem* wages determined by the Director, regardless of any contractual relationship which may be alleged to exist between the Contractor or any Subcontractor and such workers.

e. The Contractor and all subcontractors shall pay and shall cause to be paid to each worker needed to execute the work on the Project travel and subsistence payments, as such travel and subsistence payments are defined in the applicable collective bargaining Contracts filed with the Department of Industrial Relations in accordance with Labor Code § 1773.8.

f. If during the period any bid for work on this Project remains open, the Director of Industrial Relations determines that there has been a change in any prevailing rate of *per diem* wages in the locality in which this public work is to be performed, such change shall not alter the wage rates in the Notice calling for Bids or the contract subsequently awarded. Provided however if this contract is extended on a year-by-year basis as provided in Section 1, then the prevailing wage then applicable at the time of the contract extension shall apply during the term of that extension.

g. Pursuant to Labor Code § 1775, the Contractor shall as a penalty to the City, forfeit Fifty Dollars ($50.00) for each calendar day, or portion thereof, for each worker paid less than the prevailing rate of *per diem* wages, determined by the Director, for such craft or classification in which such worker is employed for any public work done under the Contract by the Contractor or by any Subcontractor under it. The amount of the penalty shall be determined by the Labor Commission. In addition, the difference between such prevailing rate of *per diem* wage and the amount paid to each worker for each calendar day or portion thereof for which each worker was paid less than the prevailing rate of *per diem* wage shall be paid to each work by the Contractor.

h. Any worker employed to perform work on the Project, which work is not covered by any craft or classification listed in the general prevailing rate of *per diem* wages determined by the Director, shall be paid not less than the minimum rate of wages specified therein for the craft or classification which most nearly corresponds to the work on the Project to be performed by them, and such minimum wage rate shall be retroactive to time of initial employment of such person in such craft or classification.

i. For those crafts or job classifications requiring special prevailing wage determinations, please contact the Division of Labor Statistics and Research, Prevailing Wage Unit, P.O. Box 420603, San Francisco, CA 94142-0603, (415) 703-4774 or check out the web site at www.dir.ca.gov.

21. **HOURS OF LABOR**.

a. As provided in Article 3 (commencing at § 1810), Chapter 1, Part 7, Division 2 of the Labor Code, eight (8) hours of labor shall constitute a legal day's work. The time of service of any worker employed at any time by the Contractor or by any Subcontractor on any subcontract under this Contract, upon the work or upon any part of the work contemplated by this Contract, is limited and restricted to eight (8) hours during any one calendar day and forty (40) hours during any one calendar week, except as hereinafter provided. Notwithstanding the provision hereinabove set forth, work performed by employees of Contractor in excess of eight (8) hours per day and forty (40) hours during any one week shall be permitted upon this public work provided that the employees' compensation for all hours worked in excess of eight (8) hours per day at not less than one and one-half (1-1/2) times the basic rate of pay.

b. The Contractor shall pay to the City a penalty of Twenty-five Dollars ($25.00) for each worker employed in the execution of this Contract by the Contractor, or by any Subcontractor, for each calendar day during which such worker is required or permitted to work more than eight (8) hours in any calendar day and forty (40) hours in any one (1) calendar week, in violation of the provisions of Article 3 (commencing at § 1810), Chapter 1, Part 7, Division 2 of the Labor Code, unless compensation for the workers so employed by Contractor is not less than one and one-half (1-1/2) times the basic rate of pay for all hours worked in excess of eight (8) hours per day.

c. Holiday and overtime work, when permitted by law, shall be paid for at a rate of at least one and one-half (1½) times the above specified rate of *per diem* wages, unless otherwise specified. Holidays shall be defined in the Collective Bargaining Contract applicable to each particular craft, classification, or type of worker employed.

22. **CERTIFIED PAYROLL**.

a. Contractor's attention is directed to California Labor Code Section 1776, which requires Contractor and any subcontractors to keep an accurate payroll record and which imposes inspection requirements and penalties for non-compliance. In accordance with the Department of Industrial Relations, effective April 1, 2015, all Contractors and Subcontractors must furnish electronic certified payroll records directly to the Labor Commissioner (see https://apps.dir.ca.gov/ecpr/das/altlogin). Contractor is responsible for the submission of copies of payrolls by all subcontractors. Each payroll submitted shall be accompanied by a "Statement of Compliance", signed by the Contractor or subcontractor or his/her agent who pays or supervises the payment of the persons employed under the contract, and shall certify the following:

b. That the payroll for each payroll period contains the name, social security number, and address of each employee, his or her correct classification, including applicable area and group code, hourly rates of wages paid, daily and weekly number of hours worked, deductions made and actual wages paid, and that such information is correct and complete;

c. That such laborer or mechanic (including each helper, apprentice and trainee) employed on the contract during the payroll period has been paid the full weekly wages earned, without rebate, either directly or indirectly, and that no deductions have been made either directly or indirectly from the full wages earned, other than permissible deductions; and

d. That each laborer or mechanic has been paid not less than the applicable wage rates and fringe benefits or cash equivalents for the classification of work performed, as specified in the applicable wage determination incorporated into the contract.

e. If the Contractor or a subcontractor does not work during the payroll period, a Statement of Non-Working Days must be submitted for each day not worked.

f. In the event of noncompliance with the requirements of such section after 10 Days written notice specifying in what respects compliance is required, the CONTRACTOR shall forfeit as a penalty to the CITY, $25.00 for each calendar Day, or portion thereof, for each worker, until strict compliance is effectuated. Upon the request of the Division of Apprenticeship Standards or the Division of Labor Standards Enforcement, such penalties shall be withheld from progress payments then due.

23. **APPRENTICES**.

a. Attention is directed to the provisions in sections 1777.5 and 1777.6 of the Labor Code concerning the employment of apprentices by the Contractor or any subcontractor under him on contracts greater than $30,000 or 20 working days. The Contractor and any subcontractor under him shall comply with the requirements of Sections 1777.5 and 1777.6 in the employment of apprentices.

b. Section 1777.5 requires the Contractor or subcontractor employing workers in any apprenticeable occupation to apply to the joint apprenticeship committee nearest the site of the public works project, and which administers the apprenticeship program in that trade, for a certificate of approval, if they have not previously applied and are covered by the local apprenticeship standards.

c. The Contractor is required to make contributions to funds established for the administration of apprenticeship programs if: (1) the Contractor employs registered apprentices or journeymen in any apprenticeable trade on such contracts and if other contractors on the public works site are making such contributions; or (2) if the Contractor is not a signatory to an apprenticeship fund and if the funds administrator is unable to accept Contractor' required contribution. The Contractor or subcontractor shall pay a like amount to the California Apprenticeship Council.

d. Information relative to apprenticeship standards, wage schedules, and other requirements may be obtained from the Director of Industrial Relations, ex-officio the Administrator of Apprenticeship, San Francisco, California, or from the Division of Apprenticeship Standards and its branch offices.

24. **LABOR DISCRIMINATION**.

No discrimination shall be made in the employment of persons upon public works because of the race, color, sex, religion, age, national origin, sexual orientation, or physical disability of such persons and every Contractor for public works violating this section is subject to all the penalties imposed for a violation of the provisions of the Labor Code, and, in particular, Section 1735.

25. **REGISTRATION OF CONTRACTORS**.

Before submitting bids, contractors shall be licensed in accordance with the provisions of Chapter 9, Division 3, of the Business and Professional Code of the State of California.

26. **URBAN RUNOFF MANAGEMENT**:

The Contractor shall avoid creating excess dust when breaking asphalt or concrete and during excavation and grading. If water is used for dust control, contractor shall use as little as necessary. Contractor shall take all steps necessary to keep wash water out of the streets, gutters and storm drains.

The Contractor shall develop and implement erosion and sediment control to prevent pollution of storm drains. Such control includes but is not limited to:

A. Use storm drain inlet protection devices such as sand bag barriers, filter fabric fences, block and gravel filters. (Block storm drain inlets prior to the start of the rainy season (October 15), on site de-watering activities and saw-cutting activities; shovel or vacuum saw-cut slurry and remove from the site).

B. Cover exposed piles of soil or construction material with plastic sheeting. All construction materials must be stored in containers.

C. Sweep and remove all materials from paved surfaces that drain to streets, gutters and storm drains prior to rain as well as at the end of the each work day. At the completion of the project, the street shall be washed and the wash water shall be collected and disposed of offsite in an appropriate location.

D. After breaking old pavement, Contractor shall remove all debris to avoid contact with rainfall or runoff.

E. Contractor shall maintain a clean work area by removing trash, litter, and debris at the end of each workday. Contractor shall also clean up any leaks, drips, and other spills as they occur.

The objective is to ensure that the City and County of Alameda County-Wide Clean Water Program is adequately enforced. These controls should be implemented prior to the start of construction, up-graded as required, maintained during construction phases to provide adequate protection, and removed at the end of construction.

These recommendations are intended to be used in conjunction with the State's Best Management Practices Municipal and Construction Handbooks, local program guidance materials from municipalities, Section 7.1.01 of the Standard Specifications and any other appropriate documents on storm water quality controls for construction.

Failure to comply with this program will result in the issuance of noncompliance notices, citations, project stop orders or fines. The fine for noncompliance of the above program is two hundred and fifty dollars ($250.00) per occurrence per day. The State under the Federal Clean Water Act can also impose a fine on the contractor, pursuant to Cal. Water Code §13385.

27. **COMPLIANCE WITH MARSH CRUST ORDINANCE**:

Contractor shall perform all excavation work in compliance with the City's Marsh Crust Ordinance as set forth at Section 13-56 of the Municipal Code. Prior to performing any excavation work, Contractor shall verify with the Building Official whether the excavation work is subject to the Marsh Crust Ordinance. Contractor shall apply for and obtain permits from Building Services on projects deemed to be subject to the Marsh Crust Ordinance.

28. **COMPLIANCE WITH THE CITY'S INTEGRATED PEST MANAGEMENT POLICY:**

The Contractor shall follow the requirements of the City's Integrated Pest Management (IPM) Policy to ensure the City is in compliance with its Municipal Regional Stormwater NPDES Permit, Order No. R2-2009-0074, issued by the San Francisco Bay Regional Water Quality Control Board.

- ❑ Contractor shall use the most current IPM technologies available to ensure the long-term prevention or suppression of pest problems and to minimize negative impacts on the environment, non-target organisms, and human health for the control or management of pests in and around City buildings and facilities, parks and golf courses, urban landscape areas, rights-of-way, and other City properties.
- ❑ Contractor will consider the City IPM Policy's hierarchy of options or alternatives listed below, in the following order before recommending the use of or applying any pesticide on City property: (1)
    1. No controls (e.g. tolerating the pest infestation, use of resistant plant varieties or allowing normal life cycle of weeds);
    2. Physical or mechanical controls (e.g. hand labor, mowing, exclusion);
    3. Cultural controls (e.g. mulching, disking, alternative vegetation) and good housekeeping (e.g. cleaning desk area);
    4. Biological controls (e.g., natural enemies or predators);
    5. Reduced-risk chemical controls (e.g., soaps or oils);
    6. Other chemical controls.
- ❑ Prior to applying chemical controls the contractor shall complete a checklist for the City's pre-approval that explains why a chemical control is necessary. For annual contracts that require regular application of chemical controls the contractor shall submit one checklist prior to the initiation of the project demonstrating that the hierarchy has been reviewed and no other options exist. (Attached as Exhibit C). Additionally, the contractor shall provide documentation to the City's project manager of the implementation of the IPM techniques hierarchy described in the City's IPM Policy.
- ❑ Contractor shall avoid the use of the following pesticides that threaten water quality, human health and the environment:
    1. Acute Toxicity Category I chemicals as identified by the Environmental Protection Agency (EPA)
    2. Organophosphate pesticides (e.g., those containing Diazinon, chlorpyrifos or malathion)
    3. Pyrethroids (bifenthrin, cyfluthrin, beta-cyfluthrin, cypermethrin, deltamethrin, esfenvalerate, lambda-cyhalothrin, permethrin, and tralomethrin), carbamates (e.g., carbaryl), and fipronil
    4. Copper-based pesticides unless their use is judicious, other approaches and techniques have been considered, and the threat of impact to water quality is prevented.
- ❑ Contractor shall sign the Contractor Verification Form (attached as Exhibit B) indicating the intent to implement the City's IPM Policy, and return a signed copy to the City's project manager.

- ❑ Contractor shall provide to the City's project manager an annual Report of all pesticide usage in support of City operations including pesticide name, active ingredient(s), target pest(s), the total amounts used and the reasons for any increase in use of any pesticide.
- ❑ Contractor shall provide a copy of any current IPM certifications(s) to the City's project manager prior to initiation of the service work.

A copy of the City's IPM Policy may be obtained from the City's project manager and is also on file with the City Clerk. *If this agreement pertains to the use of any items listed above, the Contractor will need to fill out and send in the Contractor Verification Form and Contractor Check List.*

29. **PURCHASES OF MINED MATERIALS REQUIREMENT**:

Contractor shall ensure that all purchases of mined materials such as construction aggregate, sand and gravel, crushed stone, road base, fill materials, and any other mineral materials must originate from a surface mining operation identified on the AB3098 List per the Surface Mining and Reclamation Act of 1975 (SMARA).

Within five days of award of contract, Contractor shall submit a report to City which lists the intended suppliers for the above materials and demonstrates that the suppliers are in compliance with the SMARA requirements. The AB3098 List is maintained by the Department of Conservation's Office of Mine Reclamation (OMR) and can be viewed at: www.conservation.ca.gov/OMR/ab_3098_list/index.htm. Note that the list changes periodically and should be reviewed accordingly.

30. **TERMINATION**:

In the event Contractor fails or refuses to perform any of the provisions hereof at the time and in the manner required hereunder, Contractor shall be deemed in default in the performance of this Agreement. If such default is not cured within a period of two (2) business days after receipt by Contractor from City of written notice of default, specifying the nature of such default and the steps necessary to cure such default, City may terminate the Agreement forthwith by giving to the Contractor written notice thereof.

City shall have the option, at its sole discretion and without cause, of terminating this Agreement by giving seven (7) days' prior written notice to Contractor as provided herein. Upon termination of this Agreement, each party shall pay to the other party that portion of compensation specified in this Agreement that is earned and unpaid prior to the effective date of termination.

31. **COMPLIANCES**:

Contractor shall comply with all applicable laws, state, federal, and all ordinances, rules and regulations enacted or issued by City.

32. **CONFLICT OF LAW:**

This Agreement shall be interpreted under, and enforced by the laws of the State of California excepting any choice of law rules which may direct the application of laws of another jurisdiction. The Agreement and obligations of the parties are subject to all valid laws, orders, rules, and regulations of the authorities having jurisdiction over this Agreement (or the successors of those authorities.) Any suits brought pursuant to this Agreement shall be filed with the courts of the County of Alameda, State of California.

33. **ADVERTISEMENT:**

Contractor shall not post, exhibit, display or allow to be posted, exhibited, displayed any signs, advertising, show bills, lithographs, posters or cards of any kind pertaining to the services performed under this Agreement unless prior written approval has been secured from City to do otherwise.

34. **WAIVER:**

A waiver by City of any breach of any term, covenant, or condition contained herein, shall not be deemed to be a waiver of any subsequent breach of the same or any other term, covenant, or condition contained herein, whether of the same or a different character.

35. **INTEGRATED CONTRACT**:

This Agreement represents the full and complete understanding of every kind or nature whatsoever between the parties hereto, and all preliminary negotiations and agreements of whatsoever kind or nature are merged herein. No verbal agreement or implied covenant shall be held to vary the provisions hereof. Any modification of this Agreement will be effective only by written execution signed by both City and Contractor.

36. **INSERTED PROVISIONS**:

Each provision and clause required by law to be inserted into the Agreement shall be deemed to be enacted herein, and the Agreement shall be read and enforced as though each were included herein. If through mistake or otherwise, any such provision is not inserted or is not correctly inserted, the Agreement shall be amended to make such insertion on application by either party.

37. **CAPTIONS:**

The captions in this Agreement are for convenience only, are not a part of the Agreement and in no way affect, limit or amplify the terms or provisions of this Agreement.

IN WITNESS WHEREOF, the parties have caused the Agreement to be executed on the day and year first above written.

CONTRACTOR
(Corporation)

_____
Name
Title

_____
Name
Title

CITY OF ALAMEDA
A Municipal Corporation

_____
Elizabeth D. Warmerdam
Interim City Manager

RECOMMENDED FOR APPROVAL

_____
Liam Garland
Acting Public Works Director

APPROVED AS TO FORM:
City Attorney

_____
Andrico Penick
Assistant City Attorney

COMMERCIAL GENERAL LIABILITY CG 20 10 10 93
THIS ENDORSEMENT CHANGES THE POLICY. PLEASE READ IT CAREFULLY.

ADDITIONAL INSURED - OWNERS, LESSEES or CONTRACTORS FORM B

This endorsement modifies insurance provided under the following:
COMMERCIAL GENERAL LIABILITY COVERAGE PART
SCHEDULE

Name of Person or Organization:
City of Alameda
Public Works Department
950 West Mall Square, Room 110
Alameda, CA 94501-7558

SAMPLE

(If no entry appears above, information required to complete this endorsement will be shown in the Declarations as applicable to this endorsement.)

WHO IS AN INSURED (Section II) is amended to include as an insured the person or organization shown in the Schedule, but only with respect to liability arising out of your ongoing operations performed for that insured.

REF: _____
The City of Alameda, its City Council, boards and commissions, officers & employees are additional insured for work done on their behalf by the named insured.

PRIMARY INSURANCE:
IT IS UNDERSTOOD AND AGREED THAT THIS INSURANCE IS PRIMARY AND ANY OTHER INSURANCE MAINTAINED BY THE ADDITIONAL INSURED SHALL BE EXCESS ONLY AND NOT CONTRIBUTING WITH THIS INSURANCE.

SEVERABILITY OF INTEREST:
IT IS AGREED THAT EXCEPT WITH RESPECT TO THE LIMIT OF INSURANCE, THIS COVERAGE SHALL APPLY AS IF EACH ADDITIONAL INSURED WERE THE ONLY INSURED AND SEPARATELY TO EACH INSURED AGAINST WHOM CLAIM IS MADE OR SUIT IS BROUGHT.

WAIVER OF SUBROGATION:
IT IS UNDERSTOOD AND AGREED THAT THE COMPANY WAIVES THE RIGHT OF SUBROGATION AGAINST THE ABOVE ADDITIONAL INSURED (S), BUT ONLY AS RESPECTS THE JOB OR PREMISES DESCRIBED IN THE CERTIFICATE ATTACHED HERETO.

NOTICE OF CANCELLATION:
IT IS UNDERSTOOD AND AGREED THAT IN THE EVENT OF CANCELLATION OF THE POLICY FOR ANY REASON OTHER THAN NON-PAYMENT OF PREMIUM, 30 DAYS WRITTEN NOTICE WILL BE SENT TO THE CERTIFICATE HOLDER BY MAIL. IN THE EVENT THE POLICY IS CANCELED FOR NON-PAYMENT OF PREMIUM, 10 DAYS WRITTEN NOTICE WILL BE SENT TO THE ABOVE.

POLICY NUMBER: **COMMERCIAL AUTO**
CG 20 48 02 99

THIS ENDORSEMENT CHANGES THE POLICY. PLEASE READ IT CAREFULLY.

DESIGNATED INSURED

This endorsement modifies insurance provided under the following:

BUSINESS AUTO COVERAGE FORM
GARAGE COVERAGE FORM
MOTOR CARRIER COVERAGE FORM
TRUCKERS COVERAGE FORM

SAMPLE

With respect to coverage provided by this endorsement, the provisions of the Coverage Form apply unless modified by this endorsement. This endorsement identifies person(s) or organization(s) who are "insureds" under the Who Is An Insured Provisions of the Coverage Form. This endorsement does not alter coverage provided in the Coverage Form.

This endorsement changes the policy effective on the inception date of the policy unless another date is indicated below.

Endorsement Effective:	Countersigned By: _____ (Authorized Representative)
Named Insured:	

SCHEDULE

City of Alameda
Public Works Department
950 West Mall Square, Room 110
Alameda, CA 94501-7558

WHO IS AN INSURED (Section II) is amended to include as an insured the person or organization shown in the Schedule, but only with respect to liability arising out of your ongoing operations performed for that insured.

REF: _____
The City of Alameda, its City Council, boards and commissions, officers & employees are additional insured for work done on their behalf by the named insured.

NOTICE OF CANCELLATION:
IT IS UNDERSTOOD AND AGREED THAT IN THE EVENT OF CANCELLATION OF THE POLICY FOR ANY REASON OTHER THAN NON-PAYMENT OF PREMIUM, 30 DAYS WRITTEN NOTICE WILL BE SENT TO THE CERTIFICATE HOLDER BY MAIL. IN THE EVENT THE POLICY IS CANCELED FOR NON-PAYMENT OF PREMIUM, 10 DAYS WRITTEN NOTICE WILL BE SENT TO THE ABOVE.

Exhibit ‘D

EMERGENCY FORM

EXHIBIT "D"

Emergency Form

During the course of the work and/or while the contractor has responsibility for the project, emergencies may arise where it is necessary to repair or replace safety devices, or install additional safety devices, or take preventative measures necessary for public safety. Such corrections as may be necessary are the contractor's responsibility and he, or his representative, will be called upon in such emergencies.

Please fill in the following information and submit it to the PW Supervisor.

CONTRACTOR'S NAME_____

CONTRACTOR'S PHONE NUMBER_____

PROJECT SUPERINTENDENT_____

CONTACT IN THE EVENT OF EMERGENCY:_____

Name:_____

Phone Number:_____

In cases where the contractor, or his representative, cannot be contacted or will not take the necessary actions, the City Public Works Department will be notified and the necessary repairs, corrections, or changes will be made. The contractor will be billed for such remedial action. Charges will include the cost of labor at applicable rates, the City's normal overhead factor, the rental of any equipment or safety devices placed during the emergency that are damaged or stolen, or otherwise not returned to the City, will be billed to the contractor.

Scheduled starting date_____

Scheduled completion date_____

Job Name :_____

EXHIBIT “E”

PERFORMANCE BOND FORM

EXHIBIT "E"

Performance Bond Form

PERFORMANCE BOND

KNOW ALL MEN BY THESE PRESENTS: that

_____
(Name of Contractor)

_____
(Address of Contractor)

a _____, hereinafter called Principal, and
(Corporation, Partnership, or Individual)

_____
(Name of Surety)

_____
(Address of Surety)

hereinafter called Surety, are held and firmly bound unto

_____
(Name of Owner)

_____
(Address of Owner)

hereinafter called OWNER, in the penal sum of
_____ Dollars. ($ _____)

in lawful money of the United States, f or the payment of which sum well and truly to be made, we bind ourselves, successors, and assigns, jointly and severally, firmly by these presents.

THE CONDITION OF THIS OBLIGATION is such that whereas, the Principal entered into a certain contract with the OWNER, dated the _____ day of _____, 2015, a copy of which is hereto attached and made a part hereof for the construction of:

_____

_____

_____

NOW, THEREFORE, if the Principal shall well, truly and faithfully perform its duties, all the undertakings, covenants, terms, conditions, and agreements of said contract during the original term thereof, and any extensions thereof which may be granted by the OWNER, with or without notice to the Surety and during the one year guaranty period, and if he shall satisfy all claims and demands incurred under such contract, and shall fully indemnify and save harmless the OWNER from all costs and damages which it may suffer by reason of failure to do so, and shall reimburse and repay the OWNER all outlay and expense which the OWNER may incur in making good any default, then this obligation shall be void; otherwise to remain in full force and effect.

EXHIBIT 'E'

PERFORMANCE BOND FORM

PROVIDED, FURTHER, that the said surety, for value received hereby stipulates and agrees that no change, extension of time, alteration or addition to the terms of the contract or to WORK to be performed thereunder or the SPECIFICATIONS accompanying the same shall in any wise affect its obligation on this BOND, and it does hereby waive notice of any such change, extension of time, alteration or addition to the terms of the contract or to the WORK or to the SPECIFICATIONS.

PROVIDED, FURTHER, that no final settlement between the OWNER and the CONTRACTOR shall abridge the right of any beneficiary hereunder, whose claim may be unsatisfied.

IN WITNESS WHEREOF, this instrument is executed on _____ counterparts, each one
(Number)
of which shall be deemed an original, this the _____ day of _____, 2015.

ATTEST: _____
Principal

_____ By: _____
Principal Secretary

(SEAL)

_____
(Witness as to Principal) (Address)

_____
(Address)

_____
(Surety)

ATTEST:

_____ Surety Secretary

(SEAL)

_____ By: _____
(Witness as to Surety) Attorney-in-fact

_____
(Address) (Address)

_____

NOTE: Date of BOND must not be prior to date of Contract.
If the CONTRACTOR is Partnership, all partners should execute BOND.

IMPORTANT: Surety companies executing BONDS must appear on the Treasury Department's most current list (Circular 570 as amended) and be authorized to transact business in the state where the PROJECT is located.

Exhibit ‘F’

PAYMENT BOND FORM

EXHIBIT 'F'

PAYMENT BOND FORM

KNOW ALL MEN BY THESE PRESENTS: that

_____

_____

a _____, hereinafter called Principal, and

_____

hereinafter called Surety, are held and firmly bound unto _____

_____

_____

hereinafter called OWNER, in the penal sum of _____ Dollars. ($ _____)

in lawful money of the United States, for the payment of which sum well and truly to be made, we bind ourselves, successors, and assigns, jointly and severally, firmly by these presents.

THE CONDITION OF THIS OBLIGATION is such that whereas, the Principal entered into a certain contract with the OWNER, dated the _____ day of _____, 2015, a copy of which is hereto attached and made a part hereof for the construction of:

_____

_____

_____

NOW, THEREFORE, if the Principal shall promptly make payment to all persons, firms, SUBCONTRACTORS, and corporations furnishing materials for or performing labor in the prosecution of the WORK provided for in such contract, and any authorized extension or modification thereof, including all amounts due for materials, lubricants, oil, gasoline, coal and coke, repairs on machinery, equipment and tools, consumed or used in connection with the construction of such WORK, and all insurance premiums on said WORK, and for all labor, performed in such WORK whether by SUBCONTRACTOR or otherwise, then this obligation shall be void; otherwise to remain in full force and effect.

EXHIBIT 'F'

PAYMENT BOND FORM

PROVIDED, FURTHER, that the said surety, for value received hereby stipulates and agrees that no change, extension of time, alteration or addition to the terms of the contract or to WORK to be performed thereunder or the SPECIFICATIONS accompanying the same shall in any wise affect its obligation on this BOND, and it does hereby waive notice of any such change, extension of time, alteration or addition to the terms of the contract or to the WORK or to the SPECIFICATIONS.

PROVIDED, FURTHER, that no final settlement between the OWNER and the CONTRACTOR shall abridge the right of any beneficiary hereunder, whose claim may be unsatisfied.

IN WITNESS WHEREOF, this instrument is executed on _____ counterparts, each one
(Number)
of which shall be deemed an original, this the _____ day of _____, 2015.

ATTEST: _____
Principal

_____ By:_____
Principal Secretary
(SEAL)

_____
(Witness as to Principal) (Address)

_____
(Address)

_____
(Surety)

ATTEST:

_____
Surety Secretary

(SEAL)

_____ By: _____
(Witness as to Surety) Attorney-in-fact

_____
(Address) (Address)

_____

NOTE: Date of BOND must not be prior to date of Contract.
If the CONTRACTOR is Partnership, all partners should execute BOND.

IMPORTANT: Surety companies executing BONDS must appear on the Treasury Department's most current list (Circular 570 as amended) and be authorized to transact business in the state where the PROJECT is located.

Exhibit ‘G’

BIDDER’S BOND FORM

EXHIBIT 'G'

Bidder's Proposal Form Contractor Name_____

BIDDER'S BOND

We,_____
as Principal, and as Surety are bound unto the _____,
hereafter referred to as "oblige", in the penal sum of ten percent (10%) of the total amount of the bid of the Principal submitted to the Obligee for the work described below, for the payment of which sum we bind ourselves, jointly, and severally,

THE CONDITION OF THIS OBLIGATION IS SUCH, THAT:

WHEREAS, the Principal is submitted to the Obligee, for _____
(Copy here the exact description of

_____
work, including locations as it appears on the proposal)

_____

_____
for which bids are to be opened per Section 1 Proposal and Contract Requirements, Paragraph E, Presenting and Marking of Bid.

NOW, THEREFORE, if the Principal is awarded the contract and, within the time and manner required under the specifications, after the prescribed forms are presented to Contractor for signature, enters into a written contract, in the prescribed form, in accordance with the bid, and files two bonds with Obligee, one to guarantee faithful performance of the contract an the other to guarantee payment for labor and materials as provided by law, then this obligation shall be null and void; otherwise, it shall remain in full force.

In the event suit is brought upon this bond by the Obligee and judgement is recovered, the Surety shall pay all cost incurred by the Obligee in such suite, including a reasonable attorney's fee to be fixed by the court.

The surety; for value received, hereby stipulates and agrees that the obligations of said Surety and its Bond shall be in no way impaired or affected by any extension of the time within which the OWNER may accept such BID; and said Surety does hereby waive notice of any such extension.

Dated: _____, 2015. _____

_____
Principal

_____
Surety

By: _____

EXHIBIT "G"

CERTIFICATE OF ACKNOWLEDGMENT

State of California
County of Alameda

On this _____ day of _____ in the year 2015 before me _____, a Notary Public, personally appeared _____
Attorney-in-fact
who proved to me on the basis of satisfactory evidence to be the person(s) whose name(s) is/are subscribed to the within instrument and acknowledged to me that he/she/they executed the same in his/her/their authorized capacity(ies), and that by his/her/their signature(s) on the instrument the person(s), or the entity upon behalf of which the person(s) acted, executed the instrument.

I certify under PENALTY OF PERJURY under the laws of the State of California that the foregoing paragraph is true and correct.

WITNESS my hand and official seal.

Signature _____(Seal)
Notary Public

Exhibit H

CCTV Camera Specifications

Reference Image

Reference Images are captured under ideal conditions. Poor lighting, increased compression, or use of a lower quality lens will affect the quality of the images captured.

Specifications

H.264 HD OUTDOOR DOME CAMERAS

		1.3 MP (LIGHTCATCHER)	1.0 MP	2.0 MP	3.0 MP	5.0 MP
IMAGE PERFORMANCE	Image Sensor	1/3" progressive scan CMOS	1/2.7" progressive scan CMOS		WDR 1/3" progressive scan CMOS	1/3.2" progressive scan CMOS
	Active Pixels	1280 (H) x 1024 (V)	1280 (H) x 720 (V)	1920 (H) x 1080 (V)	2048 (H) x 1536 (V)	2592 (H) x 1944 (V)
	Imaging Area	4.8 mm (H) x 3.84 mm (V), 0.189" (H) x 0.151" (V)	5.9 mm (h) x 3.3 mm (V), 0.231" (H) x 0.129" (V)		4.5 mm (H) x 3.4 mm (V), 0.177" (H) x 0.133" (V)	4.6 mm (H) x 3.4 mm (V); 0.181" (H) x 0.133" (V)
	Minimum Illumination					
	3-9 mm lens:	0.02 lux (F1.2) in color mode, 0.002 lux (F1.2) in monochrome mode	0.2 lux (F1.2) in color mode, 0.02 lux (F1.2) in monochrome mode			0.3 lux (F1.2) in color mode, 0.03 lux (F1.2) in monochrome mode
	9-22 mm lens:	0.04 lux (F1.6) in color mode, 0.004 lux (F1.6) in monochrome mode	0.4 lux (F1.6) in color mode; 0.04 lux (F1.6) in monochrome mode			0.6 lux (F1.6) in color mode, 0.06 lux (F1.6) in monochrome mode
	Dynamic Range	71 dB	69 dB		100 dB	69 dB
	Image Rate	30 (all resolutions)			20 (at full resolution)	13 (at full resolution)
					30 (at 1920 x 1080 or smaller)	
	Resolution Scaling	Down to 768 x 432			Down to 480 x 360	
LENS	Lens	3-9 mm, F1.2, P-iris, remote focus and zoom				
		9-22 mm, F1.6, P-iris, remote focus and zoom				
	Angle of View					
	3-9 mm lens:	30° - 88°	35° - 98°		28° - 84°	
	9-22 mm lens:	13° - 30°	15° - 35°		12° - 28°	
IMAGE CONTROL	Image Compression Method	H.264 (MPEG-4 Part 10/AVC), Motion JPEG				
	Streaming	Multi-stream H.264 and Motion JPEG				
	Motion Detection	Selectable sensitivity and threshold				
	Electronic Shutter Control	Automatic, Manual (1/6 to 1/2000 sec)		Automatic, Manual (1/6 to 1/8000 sec)		
	Iris Control	Automatic, Manual				
	Day/Night Control	Automatic, Manual				
	Flicker Control	50 Hz, 60 Hz				
	White Balance	Automatic, Manual				
	Backlight Compensation	Adjustable				
	Privacy Zones	Up to 64 zones				
	Audio Compression Method	G.711 PCM 8 kHz				
	Audio Input/Output	Line level input and output, A/V mini-jack (3.5 mm)				
	Video Output	NTSC/PAL, A/V mini-jack (3.5 mm)				
	External I/O Terminals	Alarm In, Alarm Out				
	IR Illumination (option)	3-9 mm lens: (Surface Mount Indoor Camera without LightCatcher Technology) 850 nm wavelength, 15 m (50 ft) max. distance of IR illumination at 0 lux				
NETWORK	Network	100BASE-TX				
	Cabling Type	CAT5				
	Connector	RJ-45				
	API	ONVIF compliance version 1.02, 2.00, Profile S (www.onvif.org)				
	Security	Password protection, HTTPS encryption, digest authentication, WS authentication, user access log, 802.1x port based authentication				
	Protocol	IPv4, HTTP, HTTPS, SOAP, DNS, NTP, RTSP, RTCP, RTP, TCP/UDP, IGMP, ICMP, DHCP, Zeroconf, ARP				
	Streaming Protocols	RTP/UDP, RTP/UDP multicast, RTP/RTSP/TCP, RTP/RTSP/HTTP/TCP, RTP/RTSP/HTTPS/TCP, HTTP				
		SURFACE MOUNT OUTDOOR DOME CAMERA			PENDANT DOME CAMERA	
MECHANICAL	Dimensions (Ø x H)	152 mm x 109 mm; 6.0" x 4.3"			167 mm x 157 mm; 6.6" x 6.2"	
	Weight	1.28 kg (2.82 lbs)			2.1 kg (4.6 lbs)	
	Dome Bubble	Polycarbonate, clear				
	Body	Aluminum				
	Housing	Surface mount, vandal resistant			Pendant mount, vandal resistant	
	Finish	Powder coat, cool gray 2				
	Adjustment Range	360° pan, 180° tilt (122° tilt with -IR option), 180° azimuth				
	Onboard Storage	SD/SDHC/SDXC slot – minimum class 4; class 6 or better recommended				
ELECTRICAL	Power Consumption	9 W (10 W for -IR option)				
	Power Source	VDC: 12 V +/- 10%, 10 W min (10 W min with -IR option) PoE: IEEE802.3af Class 3 compliant		VAC: 24 V +/- 10%, 12 VA min (12 VA min with -IR option)		
	Power Connector	2-pin terminal block				
	RTC Backup Battery	3V Manganese Lithium				
ENVIRONMENTAL	Operating Temperature	-30 °C to +50 °C (-22 °F to 122 °F)				
	Storage Temperature	-10 °C to +70 °C (14 °F to 158 °F)				
	Humidity	0-95% non-condensing				
CERTIFICATIONS	Safety	UL 60950	CSA 60950	EN 60950-1	CE	RCHS	WEEE	RCM
	Environmental	IK10 Impact Rating		Meets IP66 Weather Rating				
	Electromagnetic Emissions	FCC Part 15 Subpart B Class B		IC ICES-003 Class B		EN 55022 Class B		
	Electromagnetic Immunity	EN 55024	EN 61000-4-2	EN 61000-4-3	EN 61000-4-4	EN 61000-4-5	EN 61000-4-6	EN 61000-4-11

Outline Dimensions

H3-DO

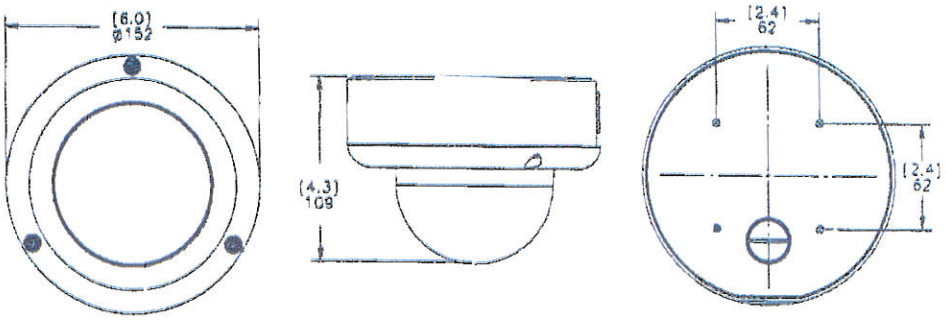

[X.X]	INCHES
X	MM

H.264 HD OUTDOOR DOME CAMERAS

H3-DP

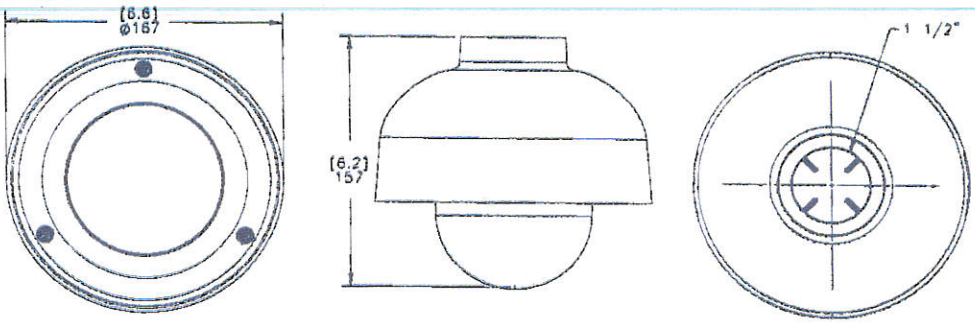

[X.X]	INCHES
X	MM

SURFACE MOUNT OUTDOOR DOME CAMERAS	
1.0-H3-DO1	1.0 Megapixel Day/Night H.264 HD 3-9 mm Outdoor Dome Camera
1.0-H3-DO1-IR	1.0 Megapixel Day/Night H.264 HD 3-9 mm Outdoor Dome Camera with IR Illuminator
1.0-H3-DO2	1.0 Megapixel Day/Night H.264 HD 9-22 mm Outdoor Dome Camera
1.3L-H3-DO1	1.3 Megapixel H.264 HD 3-9 mm Outdoor Dome Camera with LightCatcher Technology
1.3L-H3-DO2	1.3 Megapixel H.264 HD 9-22 mm Outdoor Dome Camera with LightCatcher Technology
2.0-H3-DO1	2.0 Megapixel Day/Night H.264 HD 3-9 mm Outdoor Dome Camera
2.0-H3-DO1-IR	2.0 Megapixel Day/Night H.264 HD 3-9 mm Outdoor Dome Camera with IR Illuminator
2.0-H3-DO2	2.0 Megapixel Day/Night H.264 HD 9-22 mm Outdoor Dome Camera
3.0W-H3-DO1	3.0 Megapixel WDR Day/Night H.264 HD 3-9 mm Outdoor Dome Camera
3.0W-H3-DO1-IR	3.0 Megapixel WDR Day/Night H.264 HD 3-9 mm Outdoor Dome Camera with IR Illuminator
3.0W-H3-DO2	3.0 Megapixel WDR Day/Night H.264 HD 9-22 mm Outdoor Dome Camera
5.0-H3-DO1	5.0 Megapixel Day/Night H.264 HD 3-9 mm Outdoor Dome Camera
5.0-H3-DO1-IR	5.0 Megapixel Day/Night H.264 HD 3-9 mm Outdoor Dome Camera with IR Illuminator
5.0-H3-DO2	5.0 Megapixel Day/Night H.264 HD 9-22 mm Outdoor Dome Camera
H3-DOP-SMOKE	Dome Camera Cover with Smoked Bubble
PENDANT DOME CAMERAS	
1.0-H3-DP1	1.0 Megapixel Day/Night H.264 HD 3-9mm Pendant Dome Camera
1.0-H3-DP2	1.0 Megapixel Day/Night H.264 HD 9-22mm Pendant Dome Camera
1.3L-H3-DP1	1.3 Megapixel H.264 HD 3-9 mm Pendant Dome Camera with LightCatcher Technology
1.3L-H3-DP2	1.3 Megapixel H.264 HD 9-22 mm Pendant Dome Camera with LightCatcher Technology
2.0-H3-DP1	2.0 Megapixel Day/Night H.264 HD 3-9mm Pendant Dome Camera
2.0-H3-DP2	2.0 Megapixel Day/Night H.264 HD 9-22mm Pendant Dome Camera
3.0W-H3-DP1	3.0 Megapixel WDR Day/Night H.264 HD 3-9mm Pendant Dome Camera
3.0W-H3-DP2	3.0 Megapixel WDR Day/Night H.264 HD 9-22mm Pendant Dome Camera
5.0-H3-DP1	5.0 Megapixel Day/Night H.264 HD 3-9mm Pendant Dome Camera
5.0-H3-DP2	5.0 Megapixel Day/Night H.264 HD 9-22mm Pendant Dome Camera
H3-DOP-SMOKE	Dome Camera Cover with Smoked Bubble
MNT-PEND-WALL	Indoor/Outdoor Pendant Mount Bracket

All rights reserved. Unless expressly granted in writing, no license is granted with respect to any copyright, industrial design, trademark, patent or other intellectual property rights of Avigilon Corporation or its licensors.
AVIGILON, HDSM, HIGH DEFINITION STREAM MANAGEMENT (HDSM), and LIGHTCATCHER are unregistered and/or registered trademarks of Avigilon Corporation in Canada and other jurisdictions worldwide. Other product names mentioned herein may be the unregistered and/or registered trademarks of their respective owners. ™ and ® are not used in association with each trademark in this document.

Jan. 2015-Rev1