ALAMEDA POLICE STATION
HVAC CONTROLS REPLACEMENT

TABLE OF CONTENTS

SHEET	TITLE
1	INDEX
2	AHU-1 CONTROL DETAIL
3	AHU-1 TEMPERATURE CONTROL PANEL-PART 1
4	AHU-1 TEMPERATURE CONTROL PANEL-PART 2
5	AHU-2 CONTROL DETAIL
6	AHU-2 TEMPERATURE CONTROL PANEL-PART 1
7	AHU-2 TEMPERATURE CONTROL PANEL-PART 2
8	AHU-2 TEMPERATURE CONTROL PANEL-PART 3
9	AHU-3 CONTROL DETAIL
10	AHU-3 TEMPERATURE CONTROL PANEL
11	AC UNIT CONTROL DETAILS (TYPICAL OF AC-1, 2, 3 & 6) & IT FCU'S-ROOMS 2 & 3
12	SERVER ROOM ACU CONTROL DETAIL
13	BOILER & CHILLER CONTROLS
14	MAIN CONTROL PANEL FX60 WIRING DETAIL
15	MAIN CONTROL PANEL PCG-1 & PCX-1 WIRING DETAILS
16	MAIN CONTROL PANEL LAYOUT
17	NETWORK LAYOUT & ADDRESS SCHEDULE
18	SCOPE

Contractor:
PRIME MECHANICAL
SAN JOSE, CA
(408) 428-0400

Project:
ALAMENDA POLICE STATION HVAC CONTROLS REPLACE
1555 OAK STREET, ALAMEDA, CA

THIS DOCUMENT CONTAINS PROPRIETARY INFORMATION WHICH SHALL NOT BE REPRODUCED, TRANSFERRED TO OTHER DOCUMENTS, DISCLOSED TO OTHERS, USED FOR MANUFACTURING OR ANY OTHER PURPOSE WITHOUT PRIOR WRITTEN PERMISSION FROM RSD/TOTAL CONTROL.

TOTAL CONTROL
CONTROL SYSTEMS DISTRIBUTOR
a division of RSD
1040 Commercial St. Suite 106
San Jose, Ca. 95112
Ph. (408)-441-1811 Fax (408)-441-1810

Sheet Title: INDEX

Revisions

Rev	Date	Change

Job #: xxxxxx
Designed By: $XII
Drawing By: EW
Approved By: NS
Date: AUG 26, 2013
Sheet: 1 OF 18

1/2 AHU-1 CONTROL DETAIL

7-ZONE CONTROL

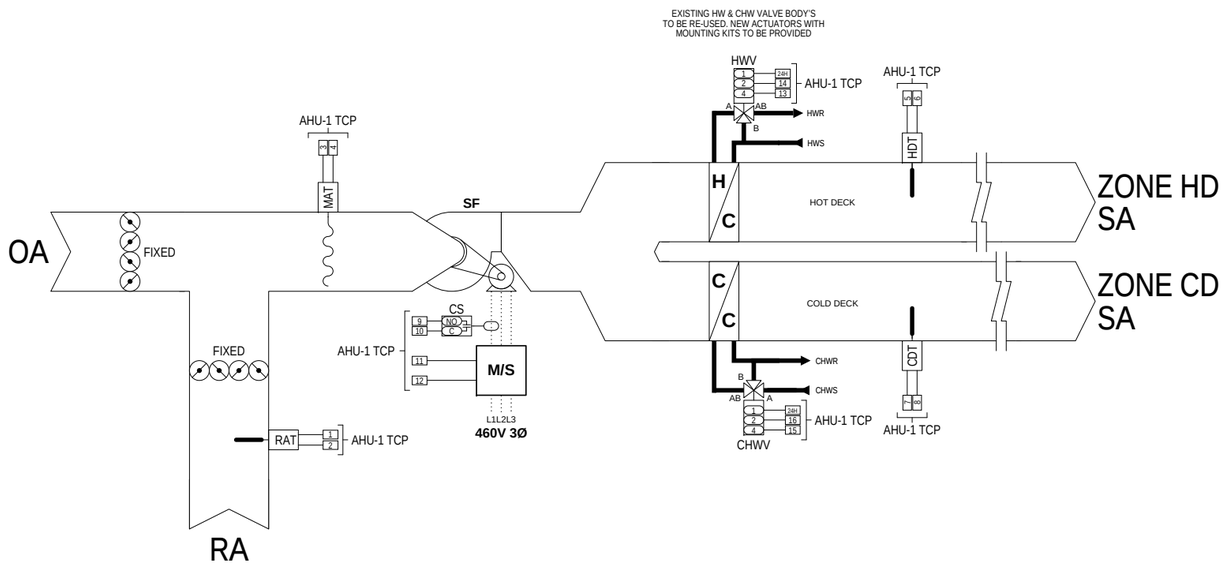

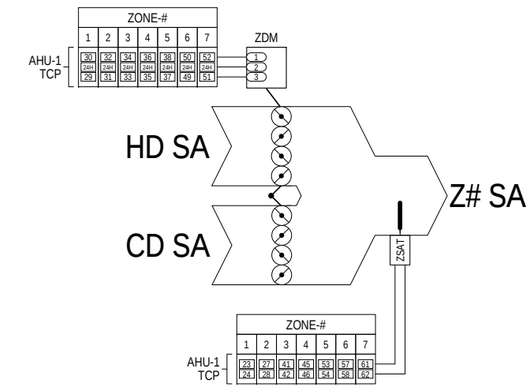

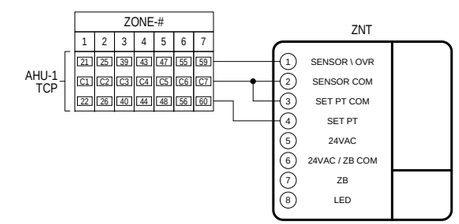

FIELD COMPONENTS

TAG	QTY	PART NUMBER		DESCRIPTION
SAT, HDT, CDT	3	JC	TE-6311M-1	Duct Mounted Sensor, 1K Nickel, 8" Probe
MAT	1	JC	TE-6315M-1	Mixed Air Averaging Duct Temp Sensor, 8' Length
DM1, 2	0	BEL	FUTURE	Proportional, Non-Spring Damper Actuator, 0-10VDC, 24VAC, 180 in-lb Torque Rating
HWV, CHWV	2	JC	VA-7202-1001	Proportional Valve Actuator, 0-10VDC, 24VAC
	2	JC	V-9999-HW1	Valve Actuator Replacement Mounting Kit
CS	1	VER	H608	Current Switch, Split-Core, Adjustable Trip
ZSAT	7	JC	TE-6311M-1	Duct Mounted Sensor, 1K Nickel, 8" Probe
ZNT	7	JC	TE-67NT-2N00	Zone Temp Sensor with Push Button Override & Setpoint Adjustment
ZDM	7	BEL	LMB24-SR	Proportional, Non-Spring Damper Actuator, 0-10VDC, 24VAC, 45 in-lb Torque Rating

Contractor:
PRIME MECHANICAL
SAN JOSE, CA
(408) 428-0400

Project:
ALAMENDA POLICE STATION HVAC CONTROLS REPLACE
1555 OAK STREET, ALAMEDA, CA

THIS DOCUMENT CONTAINS PROPRIETARY INFORMATION WHICH SHALL NOT BE REPRODUCED, TRANSFERRED TO OTHER DOCUMENTS, DISCLOSED TO OTHERS, USED FOR MANUFACTURING OR ANY OTHER PURPOSE WITHOUT PRIOR WRITTEN PERMISSION FROM RSD/TOTAL CONTROL.

TOTAL CONTROL
CONTROL SYSTEMS DISTRIBUTOR
a division of RSD
1040 Commercial St. Suite 106
San Jose, Ca. 95112
Ph. (408)-441-1811 Fax (408)-441-1810

Sheet Title: AHU-1 CONTROL DETAIL

Revisions

Rev	Date	Change

Job #: xxxxxx
Designed By: $XII
Drawing By: EW
Approved By: NS
Date: AUG 26, 2013
Sheet: 2 OF 18

1
3

AHU-1 TEMPERATURE CONTROL PANEL-PART 1

PCG-1 & PCX-1 CONTROL WIRING

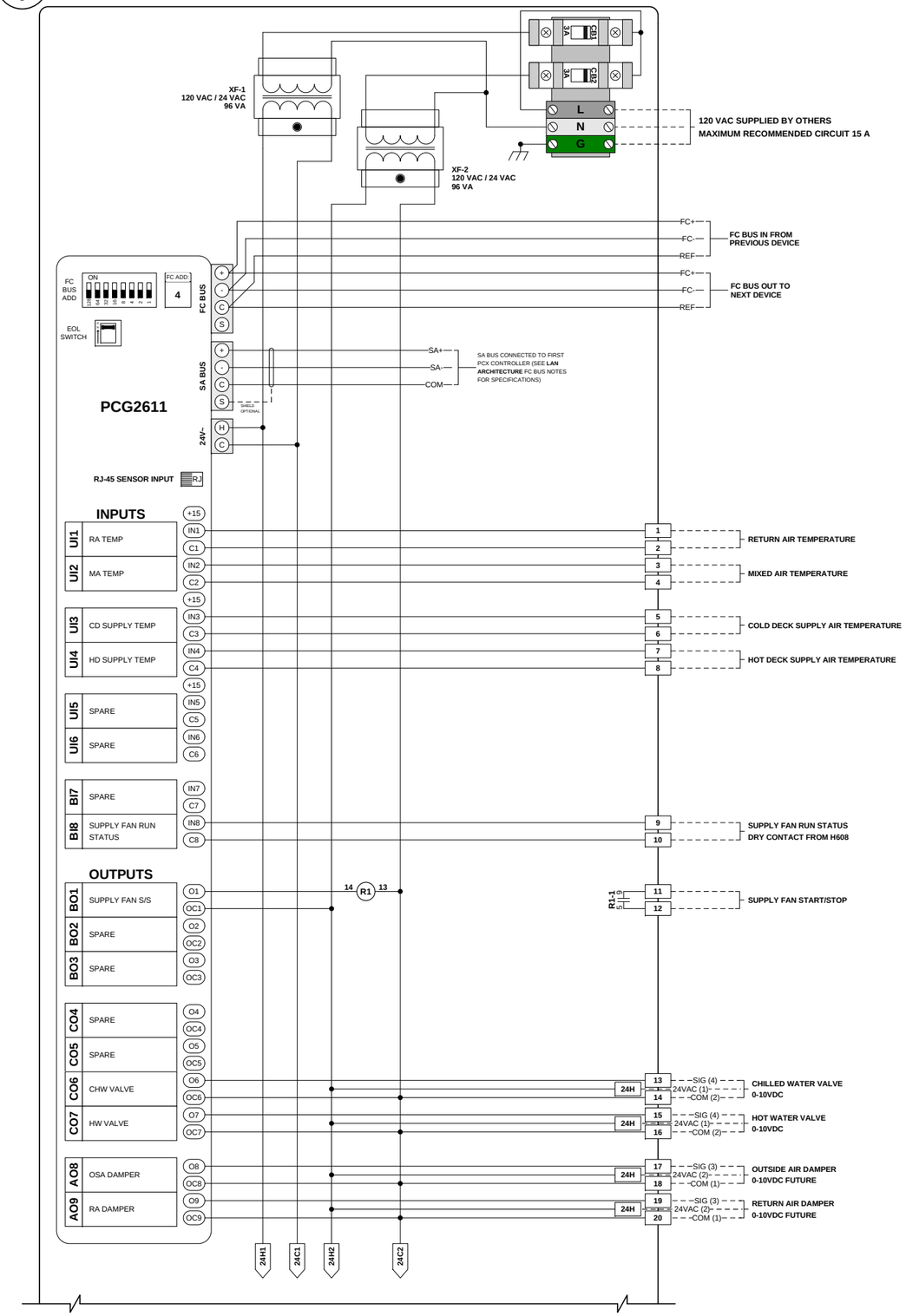

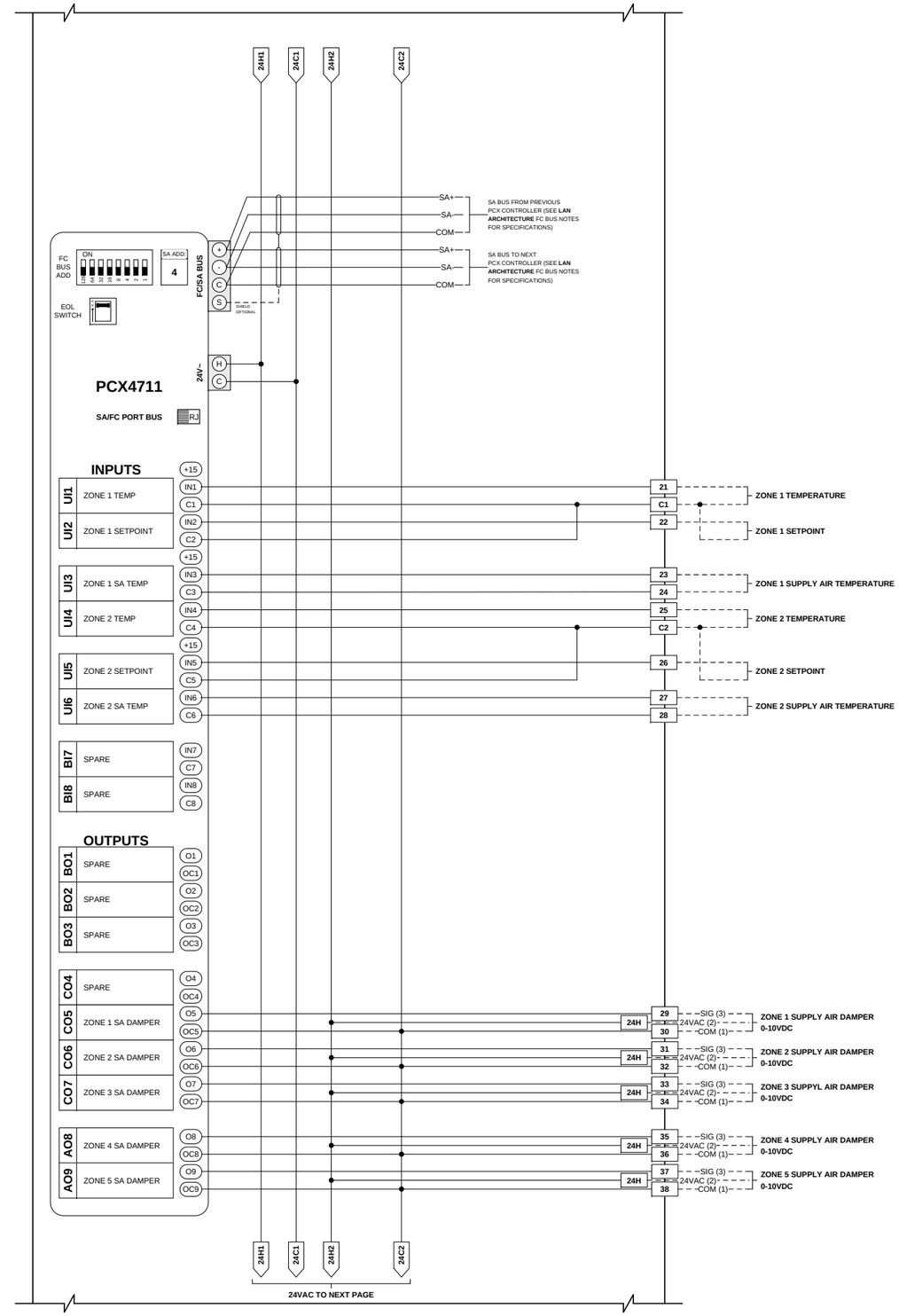

Contractor:

PRIME MECHANICAL

SAN JOSE, CA
(408) 428-0400

Project:

ALAMENDA POLICE STATION HVAC CONTROLS REPLACE

1555 OAK STREET, ALAMEDA, CA

THIS DOCUMENT CONTAINS PROPRIETARY INFORMATION WHICH SHALL NOT BE REPRODUCED, TRANSFERRED TO OTHER DOCUMENTS, DISCLOSED TO OTHERS, USED FOR MANUFACTURING OR ANY OTHER PURPOSE WITHOUT PRIOR WRITTEN PERMISSION FROM RSD/TOTAL CONTROL.

TOTAL CONTROL
CONTROL SYSTEMS DISTRIBUTOR
a division of RSD
1040 Commercial St. Suite 106
San Jose, Ca. 95112
Ph. (408)-441-1811 Fax (408)-441-1810

Sheet Title: AHU-1 TEMPERATURE CONTROL PANEL-PART 1

Revisions

Rev	Date	Change

Job #: xxxxxx
Designed By: $XII
Drawing By: EW
Approved By: NS
Date: AUG 26, 2013
Sheet: 3 OF 18

1
4

AHU-1 TEMPERATURE CONTROL PANEL-PART 2

PCX-2 & PCX-3 CONTROL WIRING

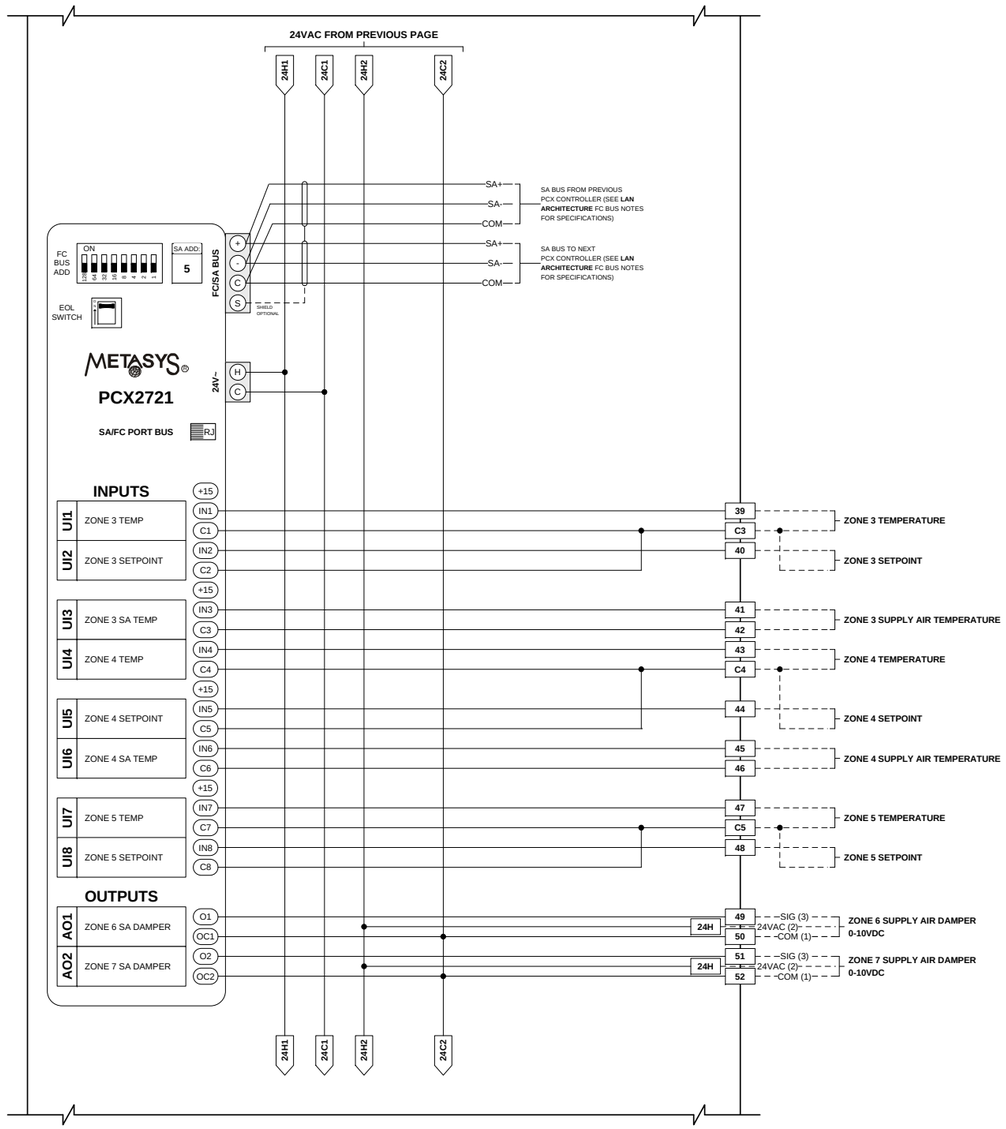

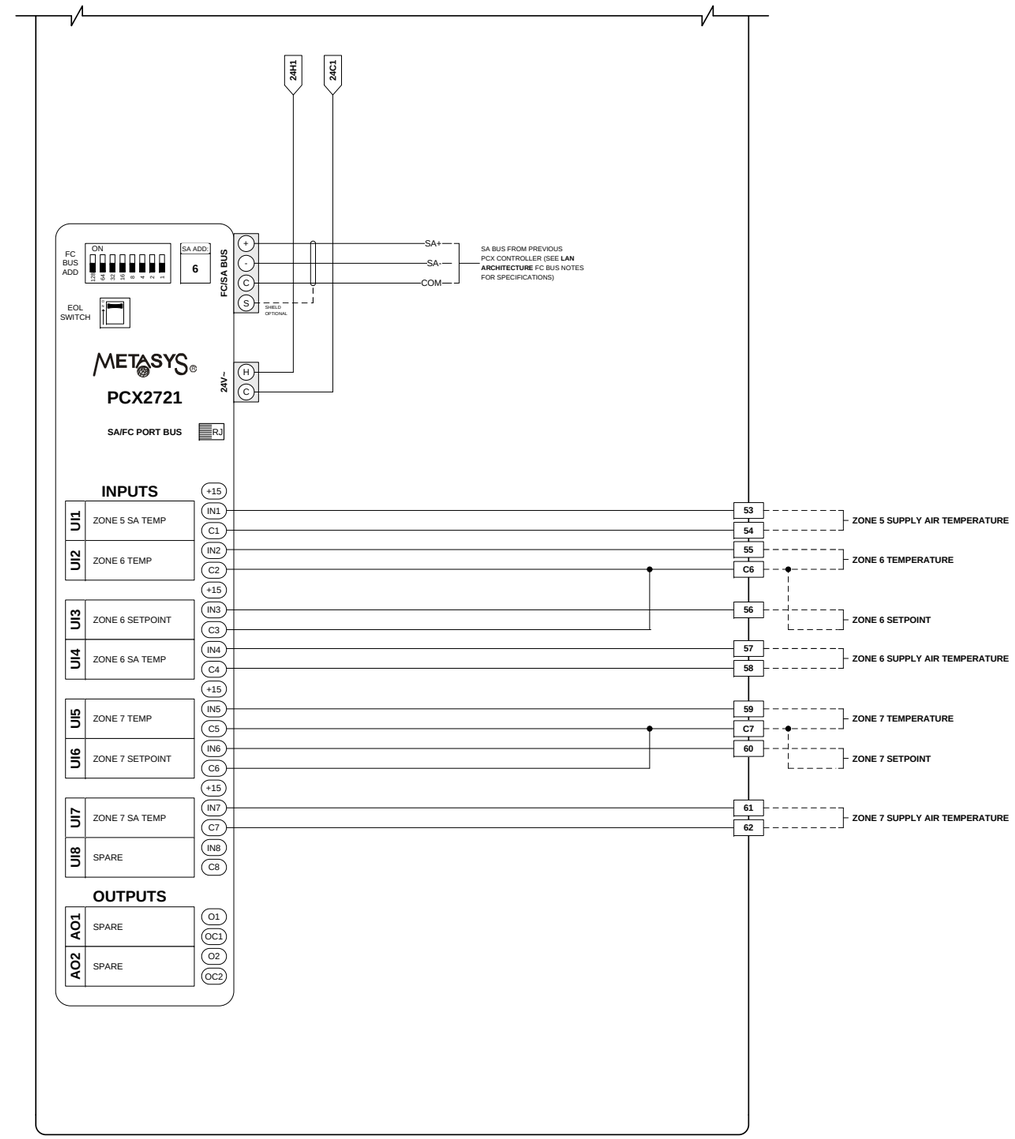

Contractor:

PRIME MECHANICAL

SAN JOSE, CA
(408) 428-0400

Project:

ALAMENDA POLICE STATION HVAC CONTROLS REPLACE

1555 OAK STREET, ALAMEDA, CA

THIS DOCUMENT CONTAINS PROPRIETARY INFORMATION WHICH SHALL NOT BE REPRODUCED, TRANSFERRED DISCLOSED TO OTHERS, USED TO OTHER DOCUMENTS, USED FOR MANUFACTURING OR ANY OTHER PURPOSE WITHOUT PRIOR WRITTEN PERMISSION FROM RSD/TOTAL CONTROL.

TOTAL CONTROL
CONTROL SYSTEMS DISTRIBUTOR
a division of RSD
1040 Commercial St. Suite 106
San Jose, Ca. 95112
Ph. (408)-441-1811 Fax (408)-441-1810

Sheet Title: AHU-1 TEMPERATURE CONTROL PANEL-PART 2

Revisions

Rev	Date	Change

Job #: xxxxxx
Designed By: $XII
Drawing By: EW
Approved By: NS
Date: AUG 26, 2013
Sheet: 4 OF 18

1/5 AHU-2 CONTROL DETAIL

10-ZONE CONTROL

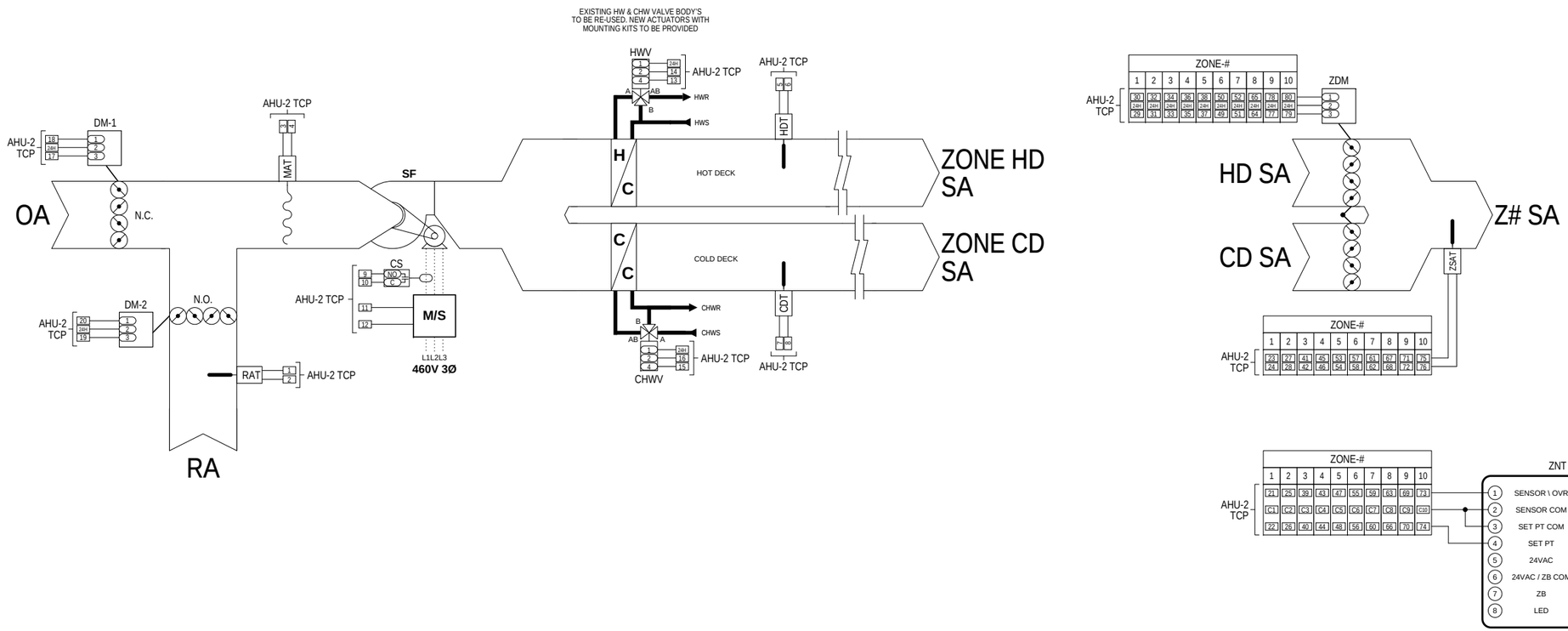

FIELD COMPONENTS

TAG	QTY	PART NUMBER		DESCRIPTION
SAT, HDT, CDT	3	JC	TE-6311M-1	Duct Mounted Sensor, 1K Nickel, 8" Probe
MAT	1	JC	TE-6315M-1	Mixed Air Averaging Duct Temp Sensor, 8' Length
DM1, 2	2	BEL	AMB24-SR	Proportional, Non-Spring Damper Actuator, 0-10VDC, 24VAC, 180 in-lb Torque Rating
HWV, CHWV	2	JC	VA-7202-1001	Proportional Valve Actuator, 0-10VDC, 24VAC
	2	JC	V-9999-HW1	Valve Actuator Replacement Mounting Kit
CS	1	VER	H608	Current Switch, Split-Core, Adjustable Trip
ZSAT	10	JC	TE-6311M-1	Duct Mounted Sensor, 1K Nickel, 8" Probe
ZNT	10	JC	TE-67NT-2N00	Zone Temp Sensor with Push Button Override & Setpoint Adjustment
ZDM	10	BEL	LMB24-SR	Proportional, Non-Spring Damper Actuator, 0-10VDC, 24VAC, 45 in-lb Torque Rating

Contractor:
PRIME MECHANICAL
SAN JOSE, CA
(408) 428-0400

Project:
ALAMENDA POLICE STATION HVAC CONTROLS REPLACE
1555 OAK STREET, ALAMEDA, CA

THIS DOCUMENT CONTAINS PROPRIETARY INFORMATION WHICH SHALL NOT BE REPRODUCED, TRANSFERRED TO OTHER DOCUMENTS, DISCLOSED TO OTHERS, USED FOR MANUFACTURING OR ANY OTHER PURPOSE WITHOUT PRIOR WRITTEN PERMISSION FROM RSD/TOTAL CONTROL.

TOTAL CONTROL
CONTROL SYSTEMS DISTRIBUTOR
a division of RSD
1040 Commercial St. Suite 106
San Jose, Ca 95112
Ph. (408)-441-1811 Fax (408)-441-1810

Sheet Title: **AHU-2 CONTROL DETAIL**

Revisions

Rev	Date	Change

Job #: xxxxxx
Designed By: $XII
Drawing By: EW
Approved By: NS
Date: AUG 26, 2013
Sheet: 5 OF 18

1
6

AHU-2 TEMPERATURE CONTROL PANEL-PART 1

PCG-1 & PCX-1 CONTROL WIRING

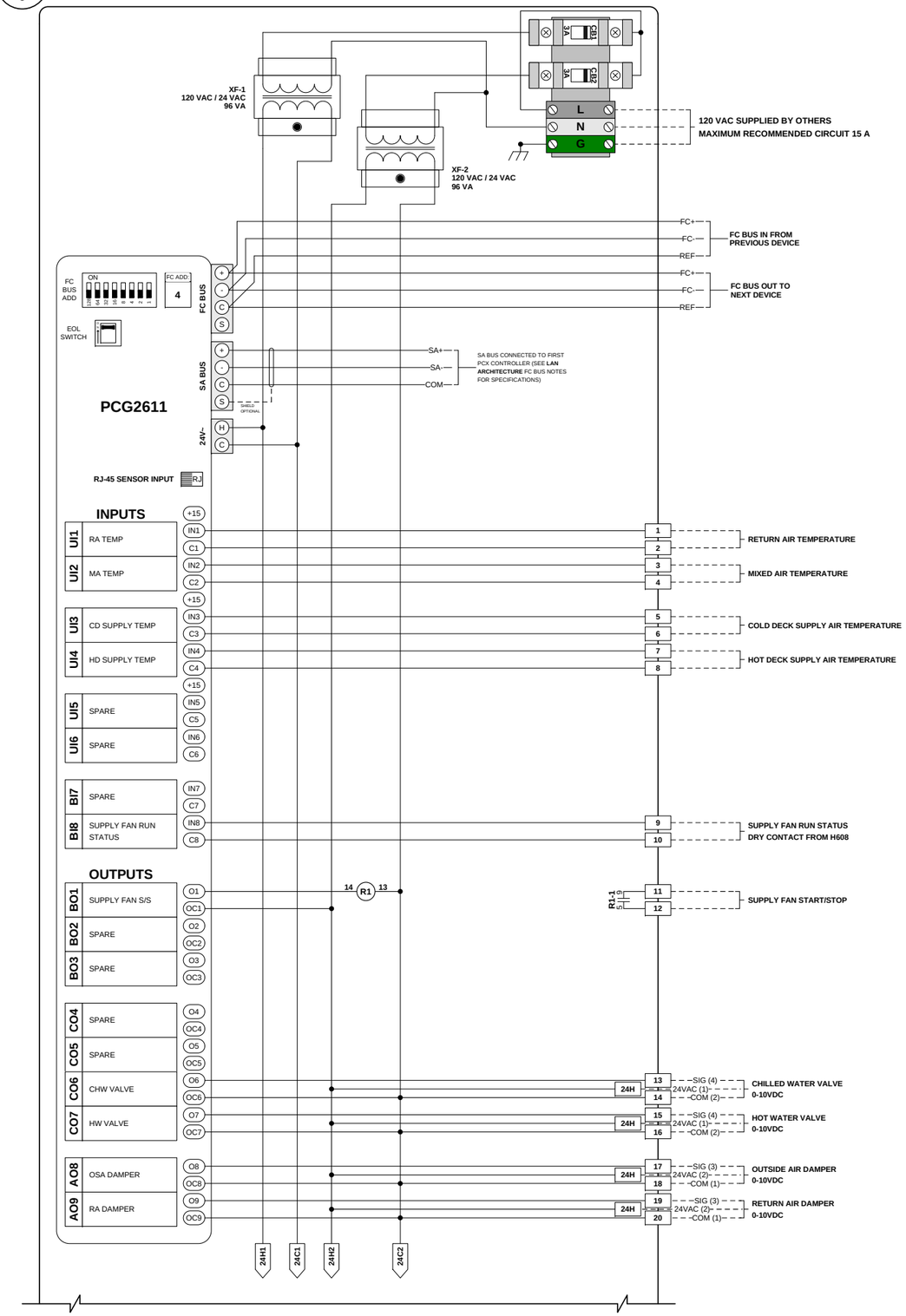

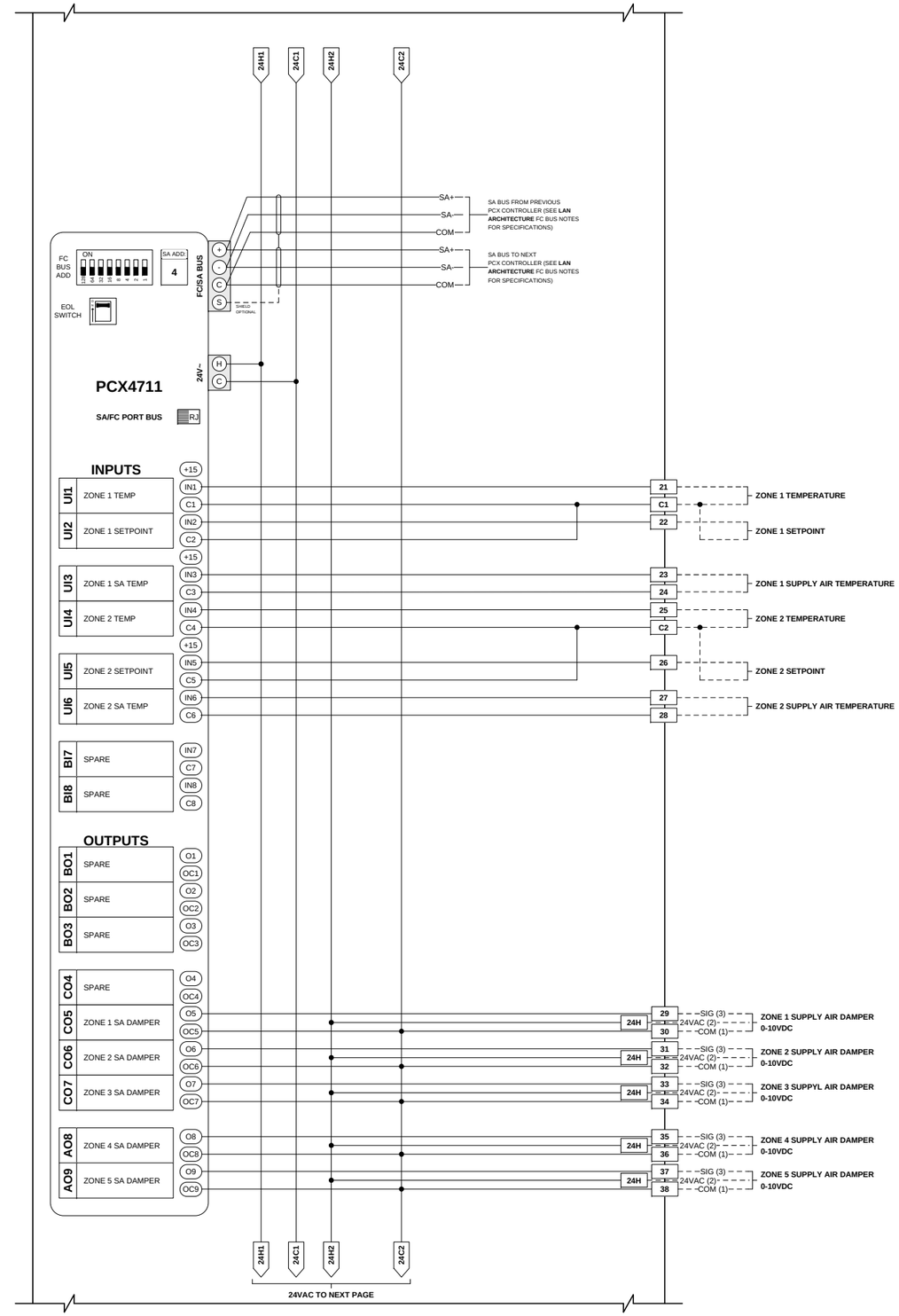

Contractor:

PRIME MECHANICAL

SAN JOSE, CA
(408) 428-0400

Project:

ALAMENDA POLICE STATION HVAC CONTROLS REPLACE

1555 OAK STREET, ALAMEDA, CA

THIS DOCUMENT CONTAINS PROPRIETARY INFORMATION WHICH SHALL NOT BE REPRODUCED, TRANSFERRED TO OTHER DOCUMENTS, DISCLOSED TO OTHERS, USED FOR MANUFACTURING OR ANY OTHER PURPOSE WITHOUT PRIOR WRITTEN PERMISSION FROM RSD/TOTAL CONTROL.

TOTAL CONTROL
CONTROL SYSTEMS DISTRIBUTOR
a division of RSD
1040 Commercial St. Suite 106
San Jose, Ca. 95112
Ph. (408)-441-1811 Fax (408)-441-1810

Sheet Title: AHU-2 TEMPERATURE CONTROL PANEL-PART 1

Revisions

Rev	Date	Change

Job #: xxxxxx
Designed By: $XII
Drawing By: EW
Approved By: NS
Date: AUG 26, 2013
Sheet: 6 OF 18

1
7

AHU-2 TEMPERATURE CONTROL PANEL-PART 2

PCX-2 & PCX-3 CONTROL WIRING

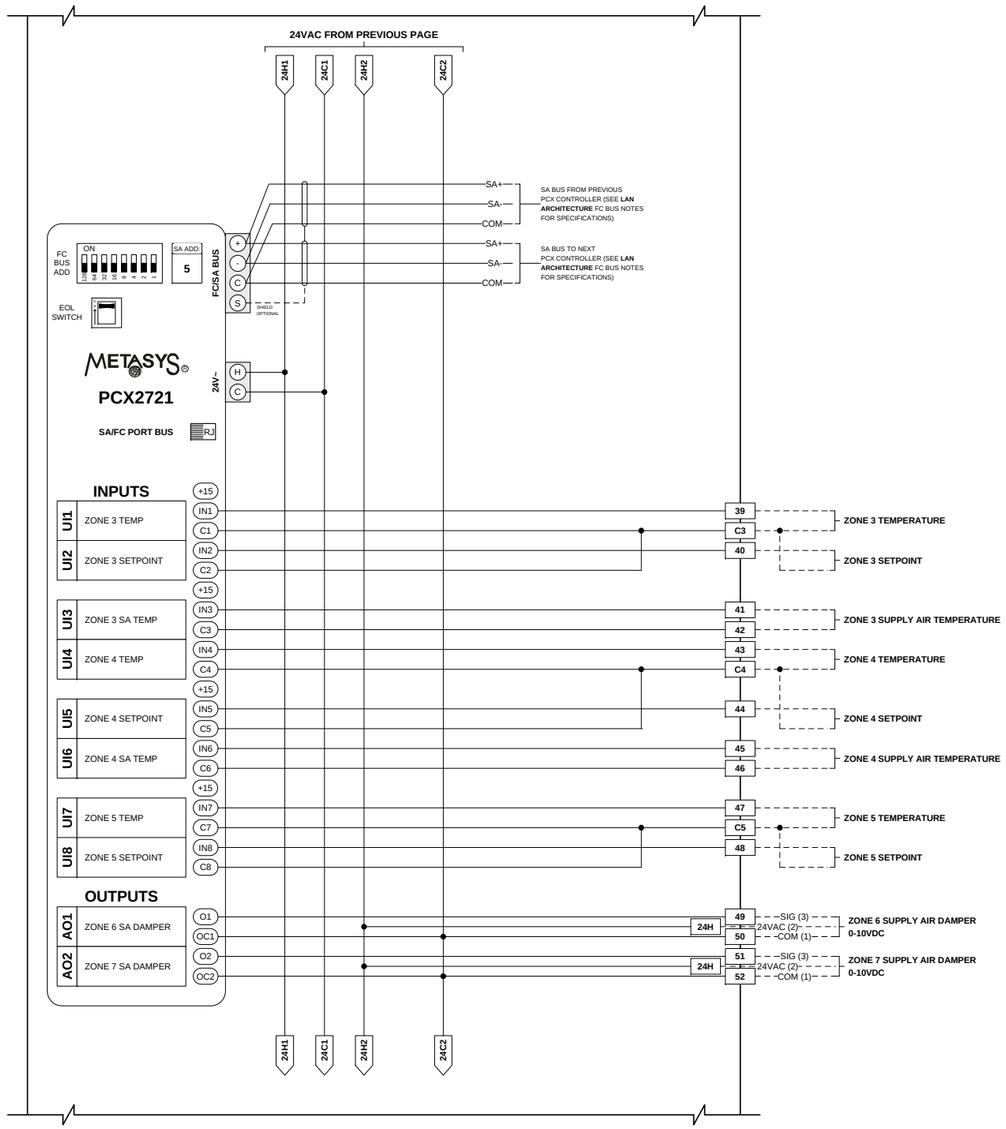

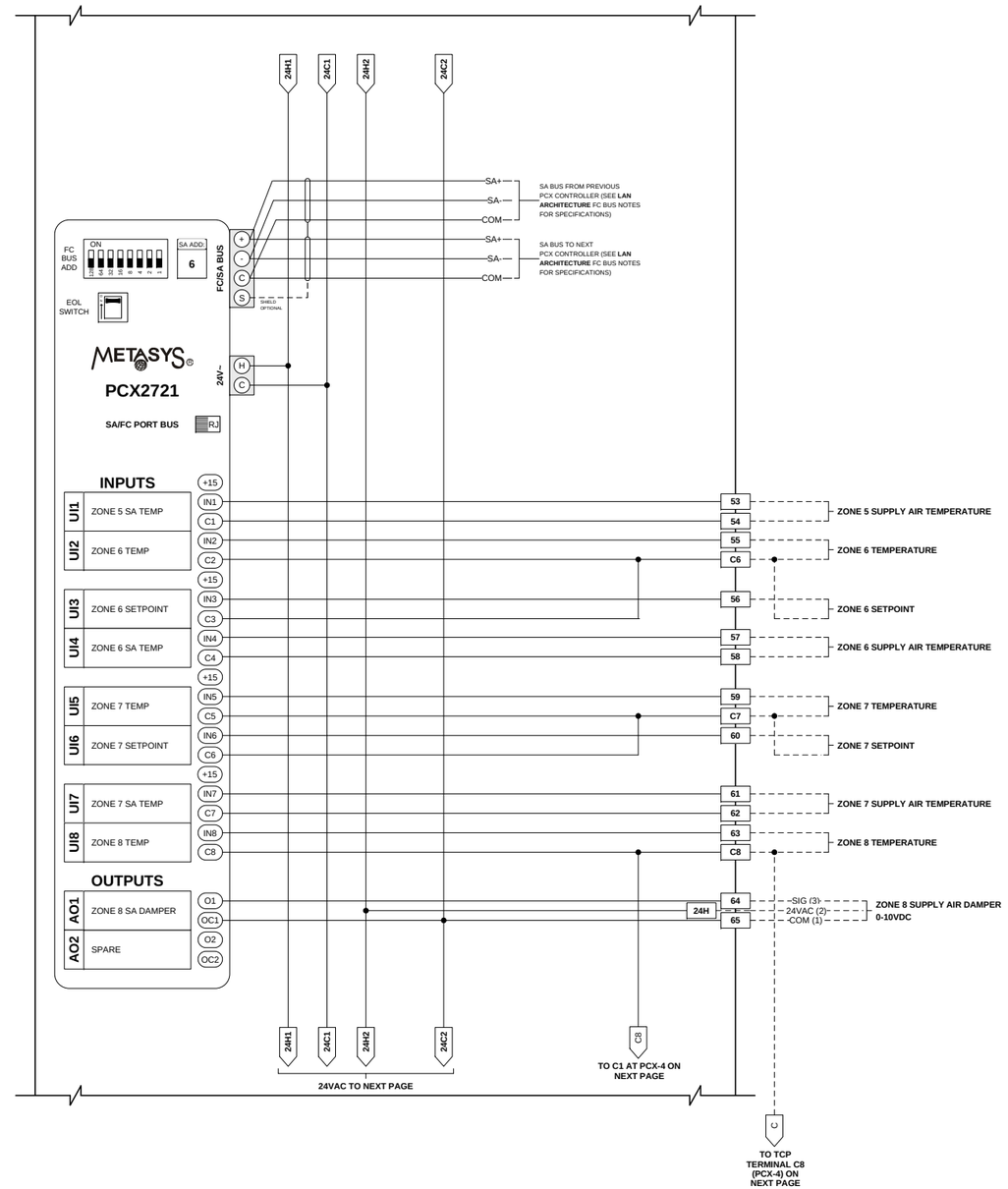

Contractor:

PRIME MECHANICAL

SAN JOSE, CA
(408) 428-0400

Project:

ALAMENDA POLICE STATION HVAC CONTROLS REPLACE

1555 OAK STREET, ALAMEDA, CA

THIS DOCUMENT CONTAINS PROPRIETARY INFORMATION WHICH SHALL NOT BE REPRODUCED, TRANSFERRED TO OTHER DOCUMENTS, DISCLOSED TO OTHERS, USED FOR MANUFACTURING OR ANY OTHER PURPOSE WITHOUT PRIOR WRITTEN PERMISSION FROM RSD/TOTAL CONTROL.

TOTAL CONTROL
CONTROL SYSTEMS DISTRIBUTOR
a division of RSD
1040 Commercial St. Suite 106
San Jose, Ca. 95112
Ph. (408)-441-1811 Fax (408)-441-1810

Sheet Title: AHU-2 TEMPERATURE CONTROL PANEL-PART 2

Revisions

Rev	Date	Change

Job #: xxxxxx
Designed By: $XII
Drawing By: EW
Approved By: NS
Date: AUG 26, 2013
Sheet: 7 OF 18

1
8

AHU-2 TEMPERATURE CONTROL PANEL-PART 3

PCX-4 CONTROL WIRING

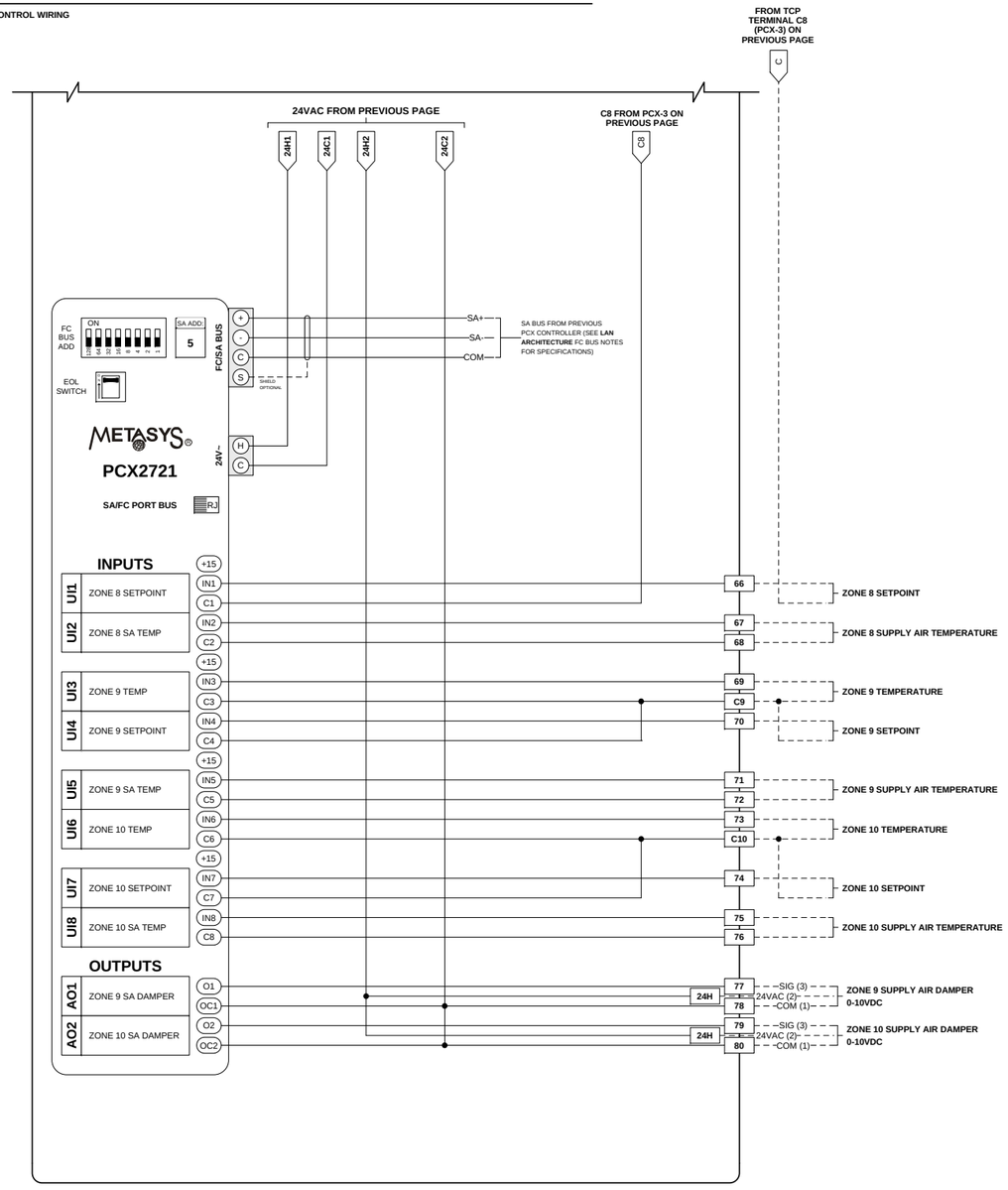

Contractor:

PRIME MECHANICAL

SAN JOSE, CA
(408) 428-0400

Project:

ALAMENDA POLICE STATION HVAC CONTROLS REPLACE

1555 OAK STREET, ALAMEDA, CA

THIS DOCUMENT CONTAINS PROPRIETARY INFORMATION WHICH SHALL NOT BE REPRODUCED, TRANSFERRED DISCLOSED TO OTHERS, USED FOR MANUFACTURING OR ANY OTHER PURPOSE WITHOUT PRIOR WRITTEN PERMISSION FROM RSD/TOTAL CONTROL.

TOTAL CONTROL
CONTROL SYSTEMS DISTRIBUTOR
a division of RSD
1040 Commercial St. Suite 106
San Jose, Ca. 95112
Ph. (408)-441-1811 Fax (408)-441-1810

Sheet Title: AHU-2 TEMPERATURE CONTROL PANEL-PART 3

Revisions

Rev	Date	Change

Job #: xxxxxx
Designed By: $XII
Drawing By: EW
Approved By: NS
Date: AUG 26, 2013
Sheet: 8 OF 18

1/9 AHU-3 CONTROL DETAIL

6 ZONE VAV'S CONTROL

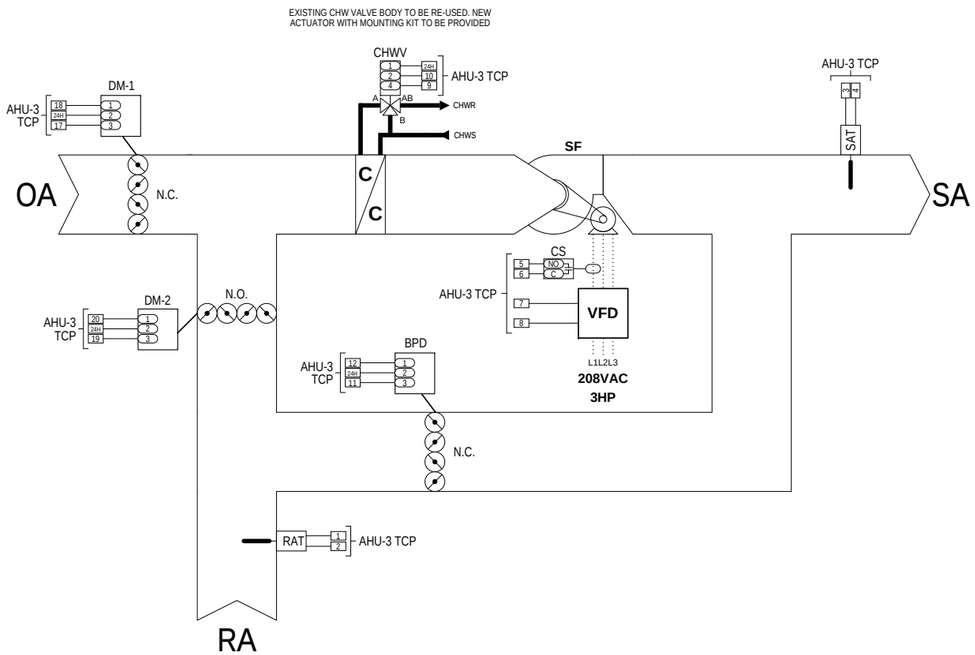

2/9 VAV CONTROL DETAIL

ZONE VAV-1 THRU VAV-6 CONTROL

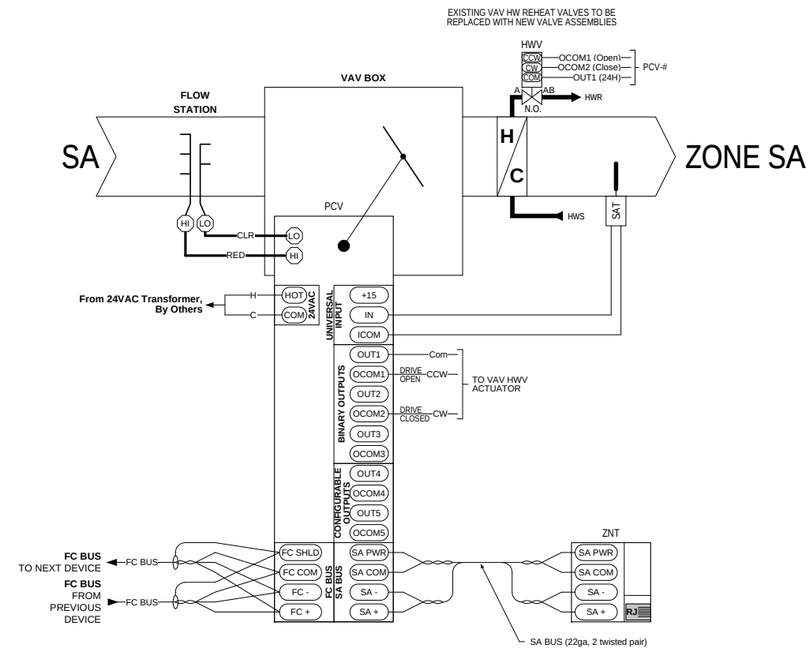

FIELD COMPONENTS

TAG	QTY	PART NUMBER	DESCRIPTION
SAT, RAT	2	JC TE-6311M-1	Duct Mounted Sensor, 1K Nickel, 8" Probe
ECON	3	BEL AMB24-SR	Proportional, Non-Spring Damper Actuator, 0-10VDC, 24VAC, 180 in-lb Torque Rating
CHWV	1	JC VA-7202-1001	Proportional Valve Actuator, 0-10VDC, 24VAC
	1	JC V-9999-HW1	Valve Actuator Replacement Mounting Kit
CS	1	VER H608	Current Switch, Split-Core, Adjustable Trip

FIELD COMPONENTS

TAG	QTY	PART NUMBER	DESCRIPTION
PCV	6	JC FX-PCV1620-0	VAV Controller w/ integrated Damper Actuactor
SAT	6	JC TE-6311V-2	Duct Temp Sensor, 1K Ohm Nickel, 8" Length
ZNT	6	JC NS-BTB7002-0	Network Zone Temp Sensor, with LCD, SP Adj, & PB Ovrd
HWV	6	JC VG1241AE+906AGA	Non-Spring Return Ball Valve with Floating Actuator, 1/2", Cv= 1.9, 24VAC

AHU-3 VAV ZONES

VAV TAG	AREA/ROOM SERVED
VAV-1	
VAV-2	
VAV-3	
VAV-4	
VAV-5	
VAV-6	

Contractor: PRIME MECHANICAL
SAN JOSE, CA
(408) 428-0400

Project: ALAMENDA POLICE STATION HVAC CONTROLS REPLACE
1555 OAK STREET, ALAMEDA, CA

THIS DOCUMENT CONTAINS PROPRIETARY INFORMATION WHICH SHALL NOT BE REPRODUCED, TRANSFERRED TO OTHER DOCUMENTS, DISCLOSED TO OTHERS, USED FOR MANUFACTURING OR ANY OTHER PURPOSE WITHOUT PRIOR WRITTEN PERMISSION FROM RSD/TOTAL CONTROL.

TOTAL CONTROL
CONTROL SYSTEMS DISTRIBUTOR
a division of RSD
1040 Commercial St. Suite 106
San Jose, Ca. 95112
Ph. (408)-441-1811 Fax (408)-441-1810

Sheet Title: AHU-3 CONTROL DETAIL

Revisions

Rev	Date	Change

Job #: xxxxxx
Designed By: $XII
Drawing By: EW
Approved By: NS
Date: AUG 26, 2013
Sheet: 9 OF 18

1
10

AHU-3 TEMPERATURE CONTROL PANEL

PCG-1 CONTROL WIRING

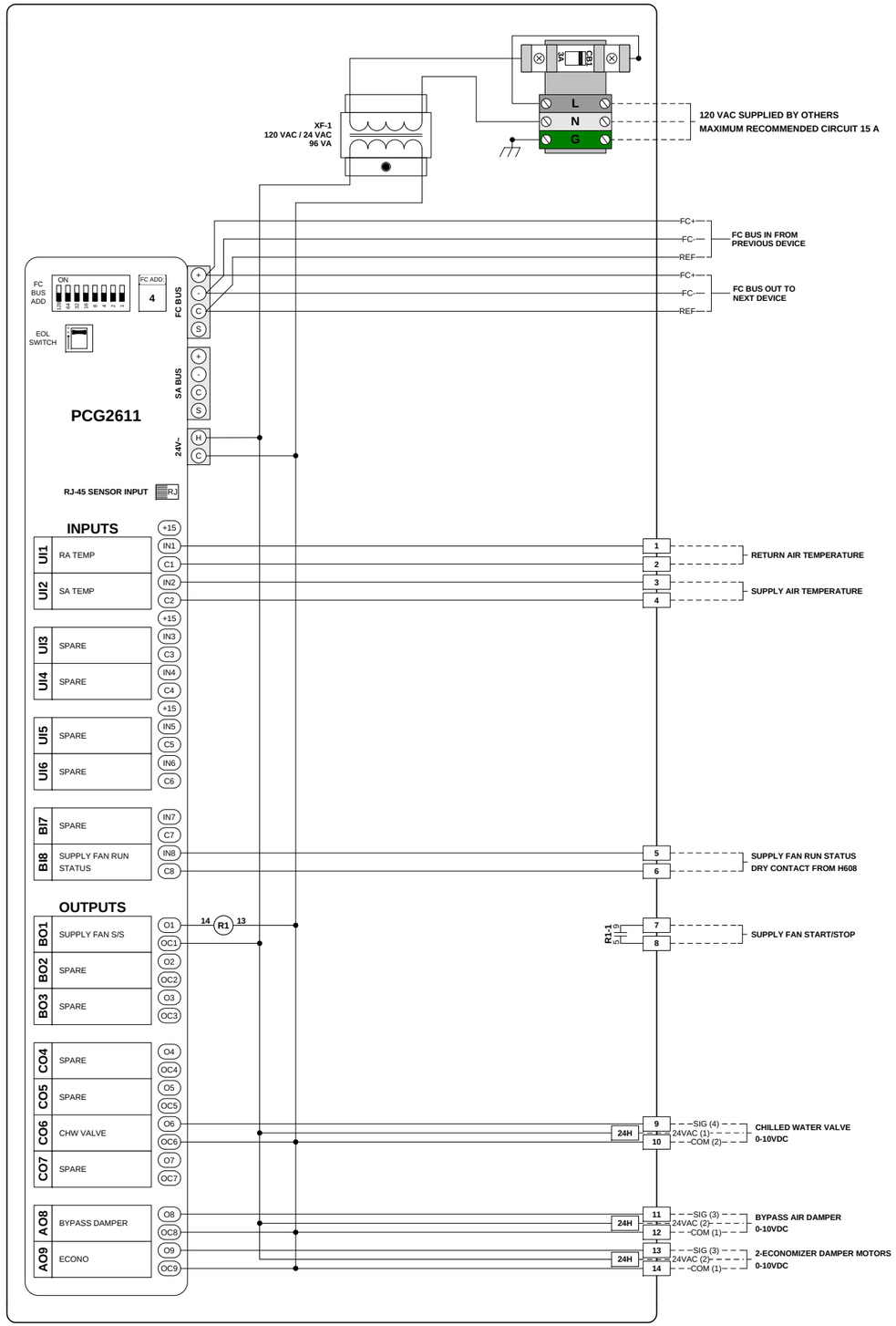

Contractor:

PRIME MECHANICAL

SAN JOSE, CA
(408) 428-0400

Project:

ALAMENDA POLICE STATION HVAC CONTROLS REPLACE

1555 OAK STREET, ALAMEDA, CA

THIS DOCUMENT CONTAINS PROPRIETARY INFORMATION WHICH SHALL NOT BE REPRODUCED, TRANSFERRED TO OTHER DOCUMENTS, DISCLOSED TO OTHERS, USED FOR MANUFACTURING OR ANY OTHER PURPOSE WITHOUT PRIOR WRITTEN PERMISSION FROM RSD/TOTAL CONTROL.

TOTAL CONTROL
CONTROL SYSTEMS DISTRIBUTOR
a division of RSD
1040 Commercial St. Suite 106
San Jose, Ca.95112
Ph. (408)-441-1811 Fax (408)-441-1810

Sheet Title: AHU-3 TEMPERATURE CONTROL PANEL

Revisions

Rev	Date	Change

Job #: xxxxxx
Designed By: $XII
Drawing By: EW
Approved By: NS
Date: AUG 26, 2013
Sheet: 10 OF 18

1/11 TYPICAL AC UNIT CONTROL

TYPICAL OF AC-1, 2, 3 & 6

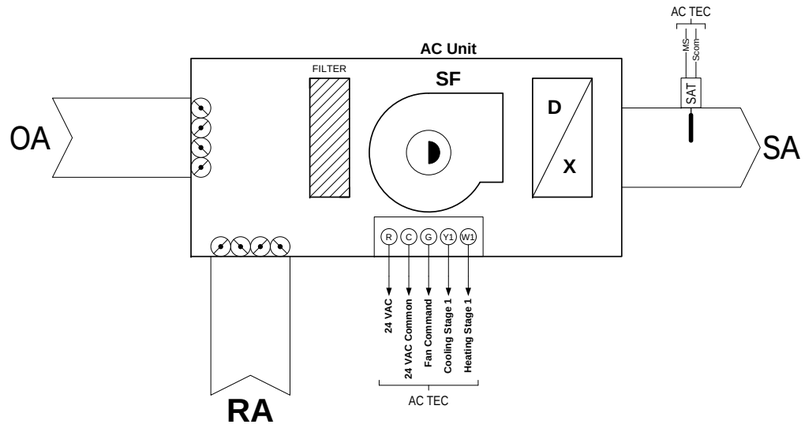

LOCATED ON WALL OF ROOM SERVED

TEC2601-4

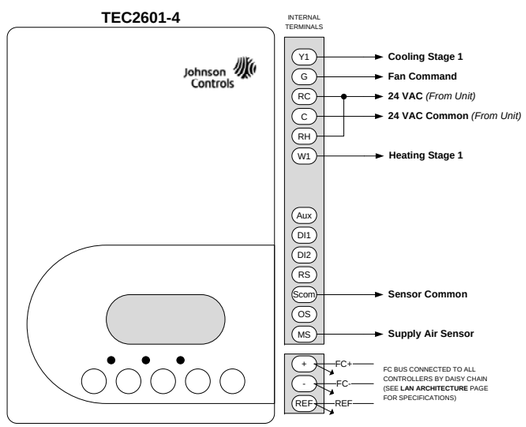

Terminal Functions	
Y1	Energizes on a Call for First-Stage Cooling
G	Energizes Fan in Accordance with the Selected Fan Mode
RC	24 VAC from Equipment Transformer
C	24 VAC (Common) from Equipment Transformer
RH	24 VAC for Heating Stages
W1	Energizes on a Call for First-Stage Heating
Aux	Auxiliary Output
DI1	Configurable Digital Input 1
DI2	Configurable Digital Input 2
RS	Remote Room Temperature Sensor
Scom	Sensor Common
OS	Auxiliary/Outdoor Air Sensor
MS	Remote Monitoring Supply Air Temperature Sensor
+,-,REF	MS/TP BUS

CONTROL COMPONENTS

TAG	QTY	PART NUMBER	DESCRIPTION
TEC	4	JC TEC2601-4	Network AC Room Thermostat Controller, Single Stage, BACnet MS/TP
SAT	4	JC TE-6361M-1	10K Thermistor Duct Temp Sensor, 8" Length

2/11 FCU CONTROL

TYPICAL OF 2, 1 FOR IT ROOM-2 & 1 FOR IT ROOM 3

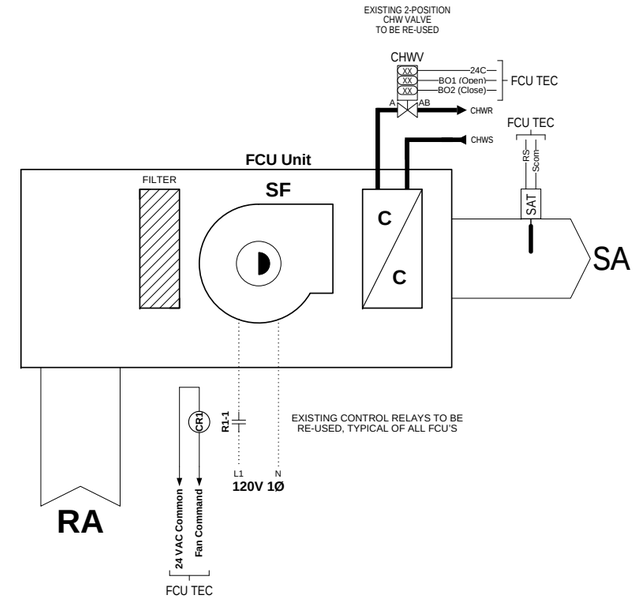

LOCATED ON WALL OF ROOM SERVED

TEC2626-4

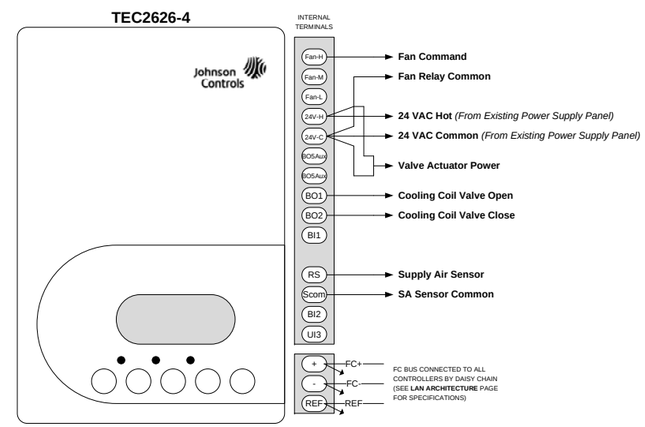

Terminal No.	Term. Label	Terminal Functions
1	Fan-H	Energizes Fan on High Speed
2	Fan-M	Energizes Fan on Medium Speed
3	Fan-L	Energizes Fan on Low Speed
4	24V-Hot	24 VAC (Hot) from Power Transformer
5	24V-Com	24 VAC (Common) from Power Transformer
6	BO5 Aux	Aux BO (Auxiliary Output)
7	BO5 Aux	Aux BO (Auxiliary Output)
8	BO3	Open Heat
9	BO4	Close Heat
10	BO1	Open Cool
11	BO2	Close Cool
12	BI1	Configurable Binary Input 1
13	RS	Remote Room Temperature Sensor
14	Scom	Sensor Common
15	BI2	Configurable Binary Input 2
16	UI3	Configurable Universal Input 3
Blank	+,-,REF	MS/TP BUS

CONTROL COMPONENTS

TAG	QTY	PART NUMBER	DESCRIPTION
TEC	4	JC TEC2626-4	Network AC Room Thermostat Controller, Single Stage, BACnet MS/TP
SAT	4	JC TE-6361M-1	10K Thermistor Duct Temp Sensor, 8" Length

Contractor:
PRIME MECHANICAL
SAN JOSE, CA
(408) 428-0400

Project:
ALAMENDA POLICE STATION HVAC CONTROLS REPLACE
1555 OAK STREET, ALAMEDA, CA

THIS DOCUMENT CONTAINS PROPRIETARY INFORMATION WHICH SHALL NOT BE REPRODUCED, TRANSFERRED TO OTHER DOCUMENTS, DISCLOSED TO OTHERS, USED FOR MANUFACTURING OR ANY OTHER PURPOSE WITHOUT PRIOR WRITTEN PERMISSION FROM RSD/TOTAL CONTROL.

TOTAL CONTROL
CONTROL SYSTEMS DISTRIBUTOR
a division of RSD
1040 Commercial St, Suite 106
San Jose, Ca 95112
Ph. (408)-441-1811 Fax (408)-441-1810

SHEET TITLE: CONTROL DETAILS (TYPICAL OF AC-1, 2, 3 & 6) & IT FCU'S-ROOMS 2 & 3

Revisions

Rev	Date	Change

Job #: xxxxxx
Designed By: $XII
Drawing By: EW
Approved By: NS
Date: AUG 26, 2013
Sheet: 11 OF 18

1/12 ACU CONTROL

FIRST FLOOR SERVER ROOM

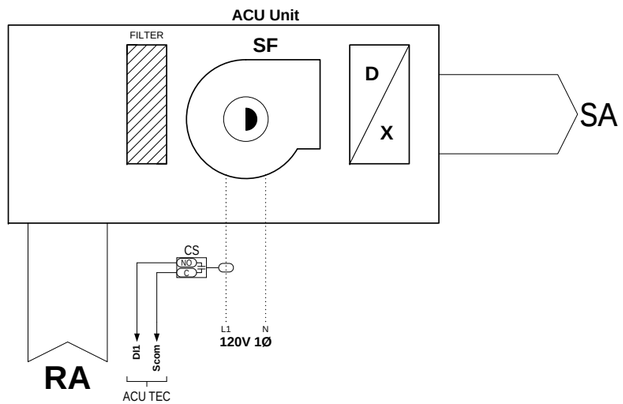

LOCATED ON WALL OF SERVER ROOM

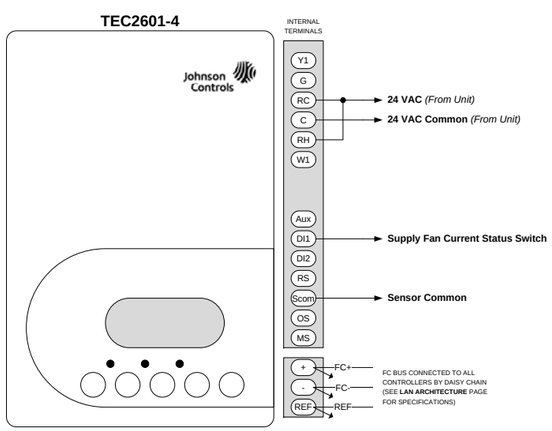

Terminal Functions	
Y1	Energizes on a Call for First-Stage Cooling
G	Energizes Fan in Accordance with the Selected Fan Mode
RC	24 VAC from Equipment Transformer
C	24 VAC (Common) from Equipment Transformer
RH	24 VAC for Heating Stages
W1	Energizes on a Call for First-Stage Heating
Aux	Auxiliary Output
DI1	Configurable Digital Input 1
DI2	Configurable Digital Input 2
RS	Remote Room Temperature Sensor
Scom	Sensor Common
OS	Auxiliary/Outdoor Air Sensor
MS	Remote Monitoring Supply Air Temperature Sensor
+,-,REF	MS/TP BUS

CONTROL COMPONENTS

TAG	QTY	PART NUMBER	DESCRIPTION
TEC	1	JC TEC2601-4	Network AC Room Thermostat Controller, Single Stage, BACnet MS/TP
CS	1	VER H608	Current Operated Switch, Split-Core, Adjustable Trip

Contractor:

PRIME MECHANICAL

SAN JOSE, CA
(408) 428-0400

Project:

ALAMENDA POLICE STATION HVAC CONTROLS REPLACE

1555 OAK STREET, ALAMEDA, CA

THIS DOCUMENT CONTAINS PROPRIETARY INFORMATION WHICH SHALL NOT BE REPRODUCED, TRANSFERRED TO OTHER DOCUMENTS, DISCLOSED TO OTHERS, USED FOR MANUFACTURING OR ANY OTHER PURPOSE WITHOUT PRIOR WRITTEN PERMISSION FROM RSD/TOTAL CONTROL.

TOTAL CONTROL
CONTROL SYSTEMS DISTRIBUTOR
a division of RSD
1040 Commercial St. Suite 106
San Jose, Ca. 95112
Ph. (408)-441-1811 Fax (408)-441-1810

Sheet Title: **SERVER ROOM ACU CONTROL DETAIL**

Revisions

Rev	Date	Change

Job #: xxxxxx
Designed By: $XII
Drawing By: EW
Approved By: NS
Date: AUG 26, 2013
Sheet: 12 OF 18

1/13 BOILER CONTROL

TYPICAL OF 1

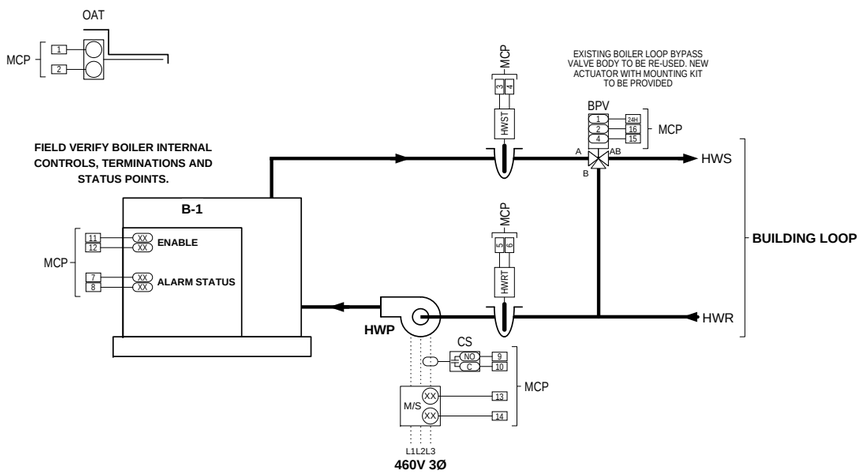

FIELD COMPONENTS

TAG	QTY	PART NUMBER		DESCRIPTION
HWST & HWRT	2	JC	TE631AP-1	Immersion Temperature Sensor, 1K, NI, 6" Length
	2	JC	WZ-1000-5	6" Immersion Well
OAT	1	JCI	TE-6313P-1	Outside Air Temp Sensor, 1K, NI, w/ Weather Shield
BPV	1	JC	VA-7202-1001	Proportional Valve Actuator, 0-10VDC, 24VAC
	1	JC	V-9999-HW1	Valve Actuator Replacement Mounting Kit
CS	1	VER	H608	Current Operated Switch, Split-Core, Adjustable Trip

2/13 CHILLER CONTROL

TYPICAL OF 1 ONLY

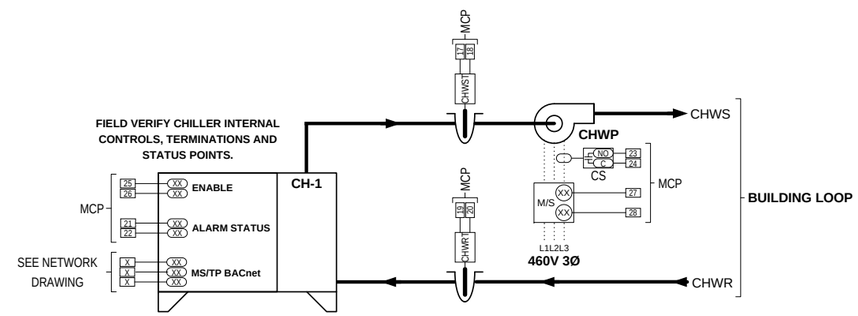

FIELD COMPONENTS

TAG	QTY	PART NUMBER		DESCRIPTION
HWST & HWRT	2	JC	TE631AP-1	Immersion Temperature Sensor, 1K, NI, 6" Length
	2	JC	WZ-1000-5	6" Immersion Well
CS	1	VER	H608	Current Operated Switch, Split-Core, Adjustable Trip

Contractor:

PRIME MECHANICAL

SAN JOSE, CA
(408) 428-0400

Project:

ALAMENDA POLICE STATION HVAC CONTROLS REPLACE

1555 OAK STREET, ALAMEDA, CA

THIS DOCUMENT CONTAINS PROPRIETARY INFORMATION WHICH SHALL NOT BE REPRODUCED, TRANSFERRED TO OTHER DOCUMENTS, DISCLOSED TO OTHERS, USED FOR MANUFACTURING OR ANY OTHER PURPOSE WITHOUT PRIOR WRITTEN PERMISSION FROM RSD/TOTAL CONTROL.

TOTAL CONTROL
CONTROL SYSTEMS DISTRIBUTOR
a division of RSD
1040 Commercial St. Suite 106
San Jose, Ca. 95112
Ph. (408)-441-1811 Fax (408)-441-1810

Sheet Title: **BOILER & CHILLER CONTROLS**

Revisions

Rev	Date	Change

Job #: xxxxxx
Designed By: $XII
Drawing By: EW
Approved By: NS
Date: AUG 26, 2013
Sheet: 13 OF 18

1
14

MAIN CONTROL PANEL-PART 1

FX-60 CONTROL WIRING

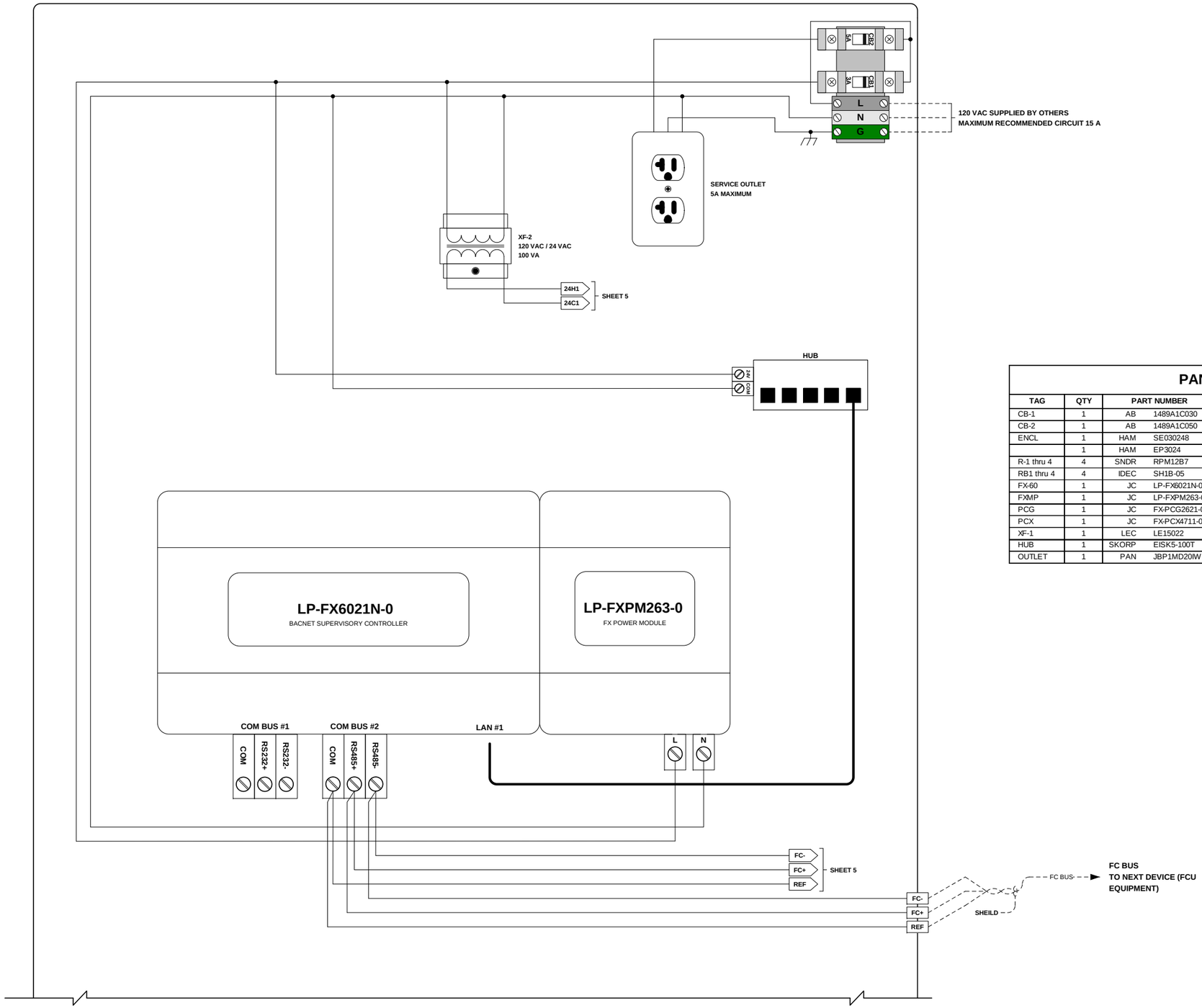

PANEL COMPONENTS

TAG	QTY	PART NUMBER		DESCRIPTION	SUPPLIED BY
CB-1	1	AB	1489A1C030	3 AMP 1 Pole UL 489 MINI CB	RSD-TC
CB-2	1	AB	1489A1C050	5 AMP 1 Pole UL 489 MINI CB	RSD-TC
ENCL	1	HAM	SE030248	EN4SD30X24X8 NEMA 4 White	RSD-TC
	1	HAM	EP3024	30 X 24 Back Panel	RSD-TC
R-1 thru 4	4	SNDR	RPM12B7	Relay 1 PL 24VAC LED, Override	RSD-TC
RB1 thru 4	4	IDEC	SH1B-05	1 Pole Relay Base	RSD-TC
FX-60	1	JC	LP-FX6021N-0	Supervisory Controller, MSTP BACnet Com via RS-485	RSD-TC
FXMP	1	JC	LP-FXPM263-0	Power Module, 90-263VAC Output, for DIN Rail Mounting	RSD-TC
PCG	1	JC	FX-PCG2621-0	17-Point Programmable Controller W/Display, 6UI, 2	RSD-TC
PCX	1	JC	FX-PCX4711-0	16-Point Expansion I/O Module: 8 BI, 8 BO	RSD-TC
XF-1	1	LEC	LE15022	120/208/240/480-24VAC, 96VA Transformer, Single Hub	RSD-TC
HUB	1	SKORP	EISK5-100T	5-Port ETHERNET Switch	RSD-TC
OUTLET	1	PAN	JBP1MD20IW	White 120VAC Outlet	RSD-TC

Contractor:

PRIME MECHANICAL

SAN JOSE, CA
(408) 428-0400

Project:

ALAMENDA POLICE STATION HVAC CONTROLS REPLACE

1555 OAK STREET, ALAMEDA, CA

THIS DOCUMENT CONTAINS PROPRIETARY INFORMATION WHICH SHALL NOT BE REPRODUCED, TRANSFERRED TO OTHER DOCUMENTS, DISCLOSED TO OTHERS, USED FOR MANUFACTURING OR ANY OTHER PURPOSE WITHOUT PRIOR WRITTEN PERMISSION FROM RSD/TOTAL CONTROL.

TOTAL CONTROL
CONTROL SYSTEMS DISTRIBUTOR
a division of RSD
1040 Commercial St. Suite 106
San Jose, Ca. 95112
Ph. (408)-441-1811 Fax (408)-441-1810

Sheet Title: **MAIN CONTROL PANEL FX60 WIRING DETAIL**

Revisions

Rev	Date	Change

Job #: xxxxxx
Designed By: $XII
Drawing By: EW
Approved By: NS
Date: AUG 26, 2013
Sheet: 14 OF 18

MAIN CONTROL PANEL-PART 2

CHWS TEMPERATURECG-1 & PCX-1 CONTROL WIRING

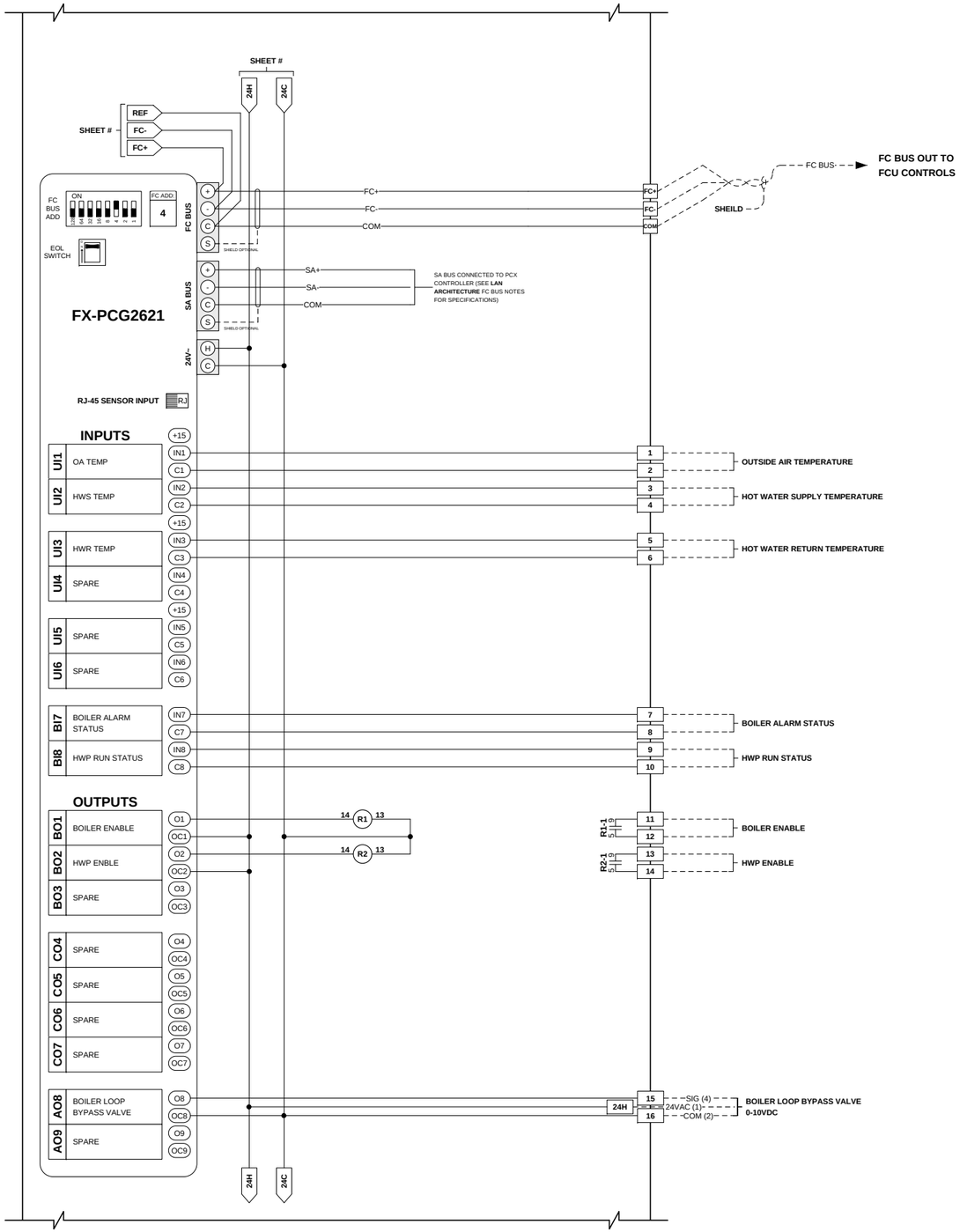

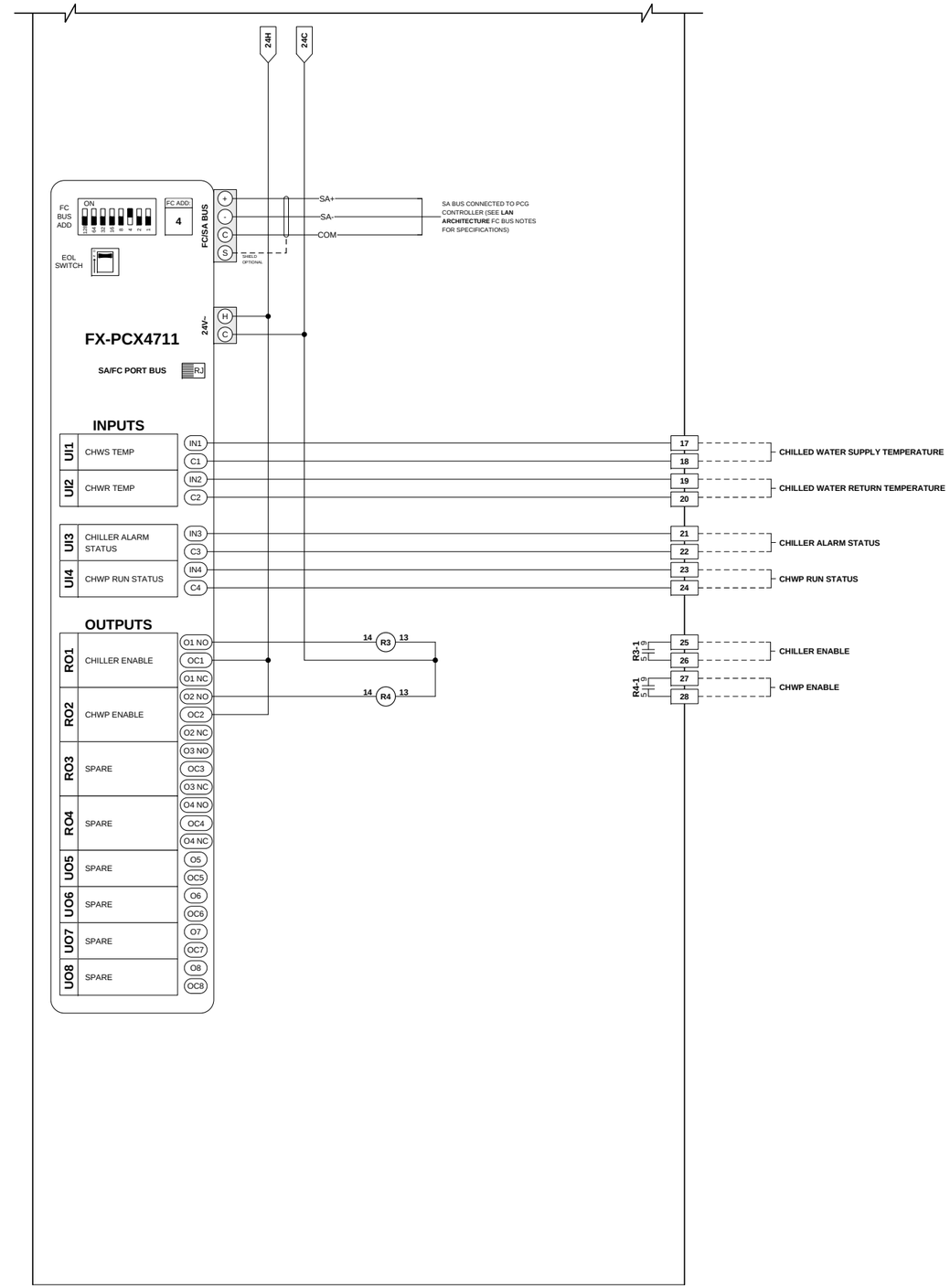

Contractor:

PRIME MECHANICAL

SAN JOSE, CA
(408) 428-0400

Project:

ALAMENDA POLICE STATION HVAC CONTROLS REPLACE

1555 OAK STREET, ALAMEDA, CA

THIS DOCUMENT CONTAINS PROPRIETARY INFORMATION WHICH SHALL NOT BE REPRODUCED, TRANSFERRED TO OTHER DOCUMENTS, DISCLOSED TO OTHERS, USED FOR MANUFACTURING OR ANY OTHER PURPOSE WITHOUT PRIOR WRITTEN PERMISSION FROM RSDTOTAL CONTROL.

TOTAL CONTROL
CONTROL SYSTEMS DISTRIBUTOR
a division of RSD
1040 Commercial St. Suite 106
San Jose, Ca.95112
Ph. (408)-441-1811 Fax (408)-441-1810

Sheet Title: **MAIN CONTROL PANEL PCG-1 & PCX-1 WIRING DETAILS**

Revisions

Rev	Date	Change

Job #: xxxxxx
Designed By: $XII
Drawing By: EW
Approved By: NS
Date: AUG 26, 2013
Sheet: 15 OF 18

1/16 MAIN CONTROL PANEL
LAYOUT

30 X 24 X 8
ENCLOSURE
NEMA 4
WHITE

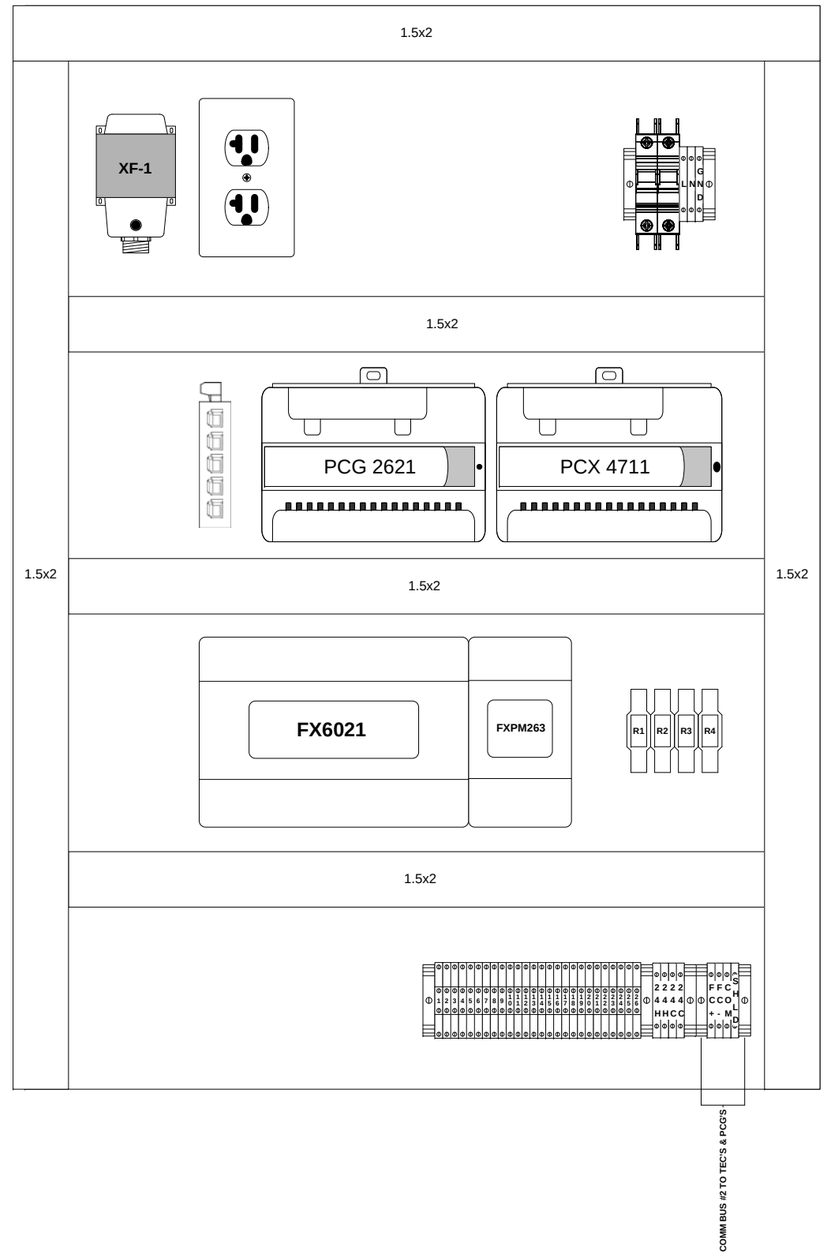

Contractor:
PRIME MECHANICAL
SAN JOSE, CA
(408) 428-0400

Project:
ALAMENDA POLICE STATION HVAC CONTROLS REPLACE
1555 OAK STREET, ALAMEDA, CA

THIS DOCUMENT CONTAINS PROPRIETARY INFORMATION WHICH SHALL NOT BE REPRODUCED, TRANSFERRED TO OTHER DOCUMENTS, DISCLOSED TO OTHERS, USED FOR MANUFACTURING OR ANY OTHER PURPOSE WITHOUT PRIOR WRITTEN PERMISSION FROM RSD/TOTAL CONTROL.

TOTAL CONTROL
CONTROL SYSTEMS DISTRIBUTOR
a division of RSD
1040 Commercial St. Suite 106
San Jose, Ca. 95112
Ph. (408)-441-1811 Fax (408)-441-1810

Sheet Title: **MAIN CONTROL PANEL LAYOUT**

Revisions

Rev	Date	Change

Job #: xxxxxx
Designed By: $XII
Drawing By: EW
Approved By: NS
Date: AUG 26, 2013
Sheet: 16 OF 18

1/17 NETWORK LAYOUT

RISER DETAIL

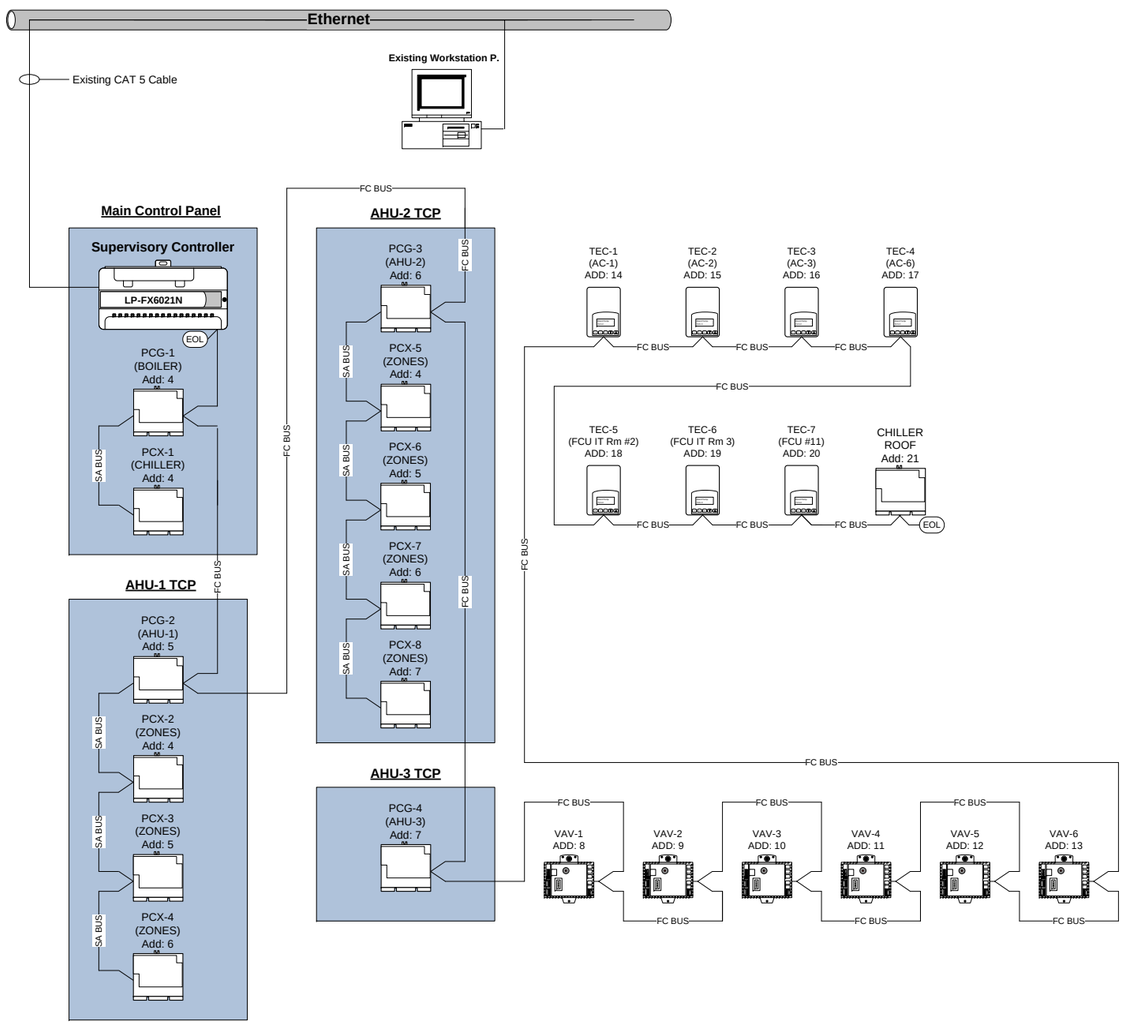

Name	Controller Tag	Controller ID	FC Address	Instance Address
Boiler	PCG-1	PCG-04	4	12004
Chiller	PCX-1	PCX-04	N/A	N/A
AHU-1	PCG-2	PCG-05	5	12005
Zones	PCX-2	PCX-04	N/A	N/A
Zones	PCX-3	PCX-05	N/A	N/A
Zones	PCX-4	PCX-06	N/A	N/A
AHU-2	PCG-3	PCG-06	6	12006
Zones	PCX-5	PCX-04	N/A	N/A
Zones	PCX-6	PCX-05	N/A	N/A
Zones	PCX-7	PCX-06	N/A	N/A
Zones	PCX-8	PCX-07	N/A	N/A
AHU-3	PCG-2	PCG-07	7	12007
VAV-1	PCV-1	PCV-08	8	12008
VAV-2	PCV-2	PCV-09	9	12009
VAV-3	PCV-3	PCV-10	10	12010
VAV-4	PCV-4	PCV-11	11	12011
VAV-5	PCV-5	PCV-12	12	12012
VAV-6	PCV-6	PCV-13	13	12013
AC-1	TEC-1	TEC-14	14	12014
AC-2	TEC-2	TEC-15	15	12015
AC-3	TEC-3	TEC-16	16	12016
AC-6	TEC-4	TEC-17	17	12017
FCU IT Room #2	TEC-5	TEC-18	18	12018
FCU IT Room #3	TEC-6	TEC-19	19	12019
ACU 1st Flr Server Room	TEC-7	TEC-20	20	12020
CHILLER	CHILLER	CHILLER	21	12021

ADDRESSING DIP SWITCH DETAIL

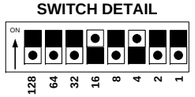

THE SET ADDRESS OF THE CONTROLLER EQUALS THE SUM OF THE SWITCHES SET TO THE ON POSITION.

(EXAMPLE: THE CURRENT ADDRESS OF THE SWITCHES IS 20)

NOTE: SWITCH LOCATION AND ORIENTATION MAY DIFFER BY CONTROLLER, VERIFY ON/OFF POSITION AND NUMERICAL ORIENTATION BEFORE FINALIZING DEVICE ADDRESS.

INSTANCE NUMBER DESCRIPTION

THE INSTANCE NUMBER IS A FIVE DIGIT REFERANCE NUMBER USED BY THE SUPERVIROSRY CONTROLLER FOR COMMUNICATIONS IDENTIFICATION. EACH DEVICE IN THE NETWORKED SYSTEM MUST HAVE A UNIQUE INSTANCE NUMBER. THE STANDARD USED BY RSD-TOTAL CONTROL IN CREATING THE INSTANCE NUMBER IS AS FOLLOWS.

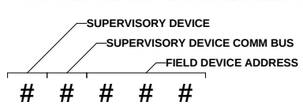

EXAMPLE #1:
SUPERVISORY DEVICE #1
FIELD DEVICE ON DEFAULT BACNET BUS #2
FIELD DEVICE ADDRESS 42
INSTANCE NUMBER WILL BE 12042

EXAMPLE #2:
SUPERVISORY DEVICE #2
FIELD DEVICE ON OPTIONAL BACNET BUS #3
FIELD DEVICE ADDRESS 92
INSTANCE NUMBER WILL BE 23092

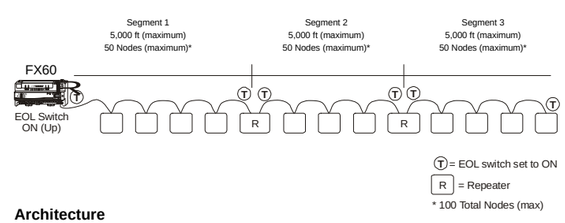

Architecture

The FC Bus and the SA Bus are both networks of daisy-chained devices.

The maximum allowable length of each bus is determined by the total length and type of cable between each daisy-chained device on the segment. For the FC Bus, the maximum allowable device counts and maximum lengths are based on the number of segments.

The FC Bus can be devided into segments by repeaters (See Below). The SA Bus is only one segment.

FC BUS DETAIL

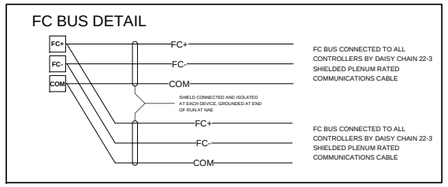

Contractor:

PRIME MECHANICAL

SAN JOSE, CA
(408) 428-0400

Project:

ALAMENDA POLICE STATION HVAC CONTROLS REPLACE

1555 OAK STREET, ALAMEDA, CA

THIS DOCUMENT CONTAINS PROPRIETARY INFORMATION WHICH SHALL NOT BE REPRODUCED, TRANSFERRED TO OTHER DOCUMENTS, DISCLOSED TO OTHERS, USED FOR MANUFACTURING OR ANY OTHER PURPOSE WITHOUT PRIOR WRITTEN PERMISSION FROM RSD/TOTAL CONTROL.

TOTAL CONTROL
CONTROL SYSTEMS DISTRIBUTOR
a division of RSD
1040 Commercial St. Suite 106
San Jose, Ca. 95112
Ph. (408)-441-1811 Fax (408)-441-1810

Sheet Title: **NETWORK LAYOUT & ADDRESS SCHEDULE**

Revisions

Rev	Date	Change

Job #: xxxxxx
Designed By: $XII
Drawing By: EW
Approved By: NS
Date: AUG 26, 2013
Sheet: 17 OF 18

Contractor Responsibilities
A. General
1. Installation of the building automation system shall be performed by the Controls Contractor. However, all installation shall be under the personal supervision of the Controls Contractor. The Controls Contractor shall certify all work as proper and complete. Under no circumstances shall the design, scheduling, coordination, programming, training, and warranty requirements for the project be delegated to a subcontractor.
B. Demolition
1. Remove controls which do not remain as part of the building automation system, all associated abandoned wiring and conduit, and all associated pneumatic tubing. The Owner will inform the Contractor of any equipment which is to be removed that will remain the property of the Owner. All other equipment which is removed will be disposed of by the Contractor.
C. Access to Site
1. Unless notified otherwise, entrance to building is restricted. No one will be permitted to enter the building unless their names have been cleared with the Owner or the Owner's Representative.
D. Code Compliance
1. All wiring, raceways, enclosures, junctions and splice boxes shall be installed in accordance with all applicable electrical codes and will comply with equipment manufacturer's recommendations.
E. Cleanup
1. At the completion of the work, all equipment pertinent to this contract shall be checked and thoroughly cleaned, and all other areas shall be cleaned around equipment provided under this contract.

Wiring, Conduit, and Cable
A. All wire will be copper and meet the minimum wire size and insulation class listed below:

Wire Class Wire Size Isolation Class
Power 12 Gauge 600 Volt
Class One 14 Gauge Std. 600 Volt
Class Two 18 Gauge Std. 300 Volt
Class Three 18 Gauge Std. 300 volt
Communications Per Mfr. Per Mfr.

B. Power and Class One wiring may be run in the same conduit. Class Two and Three wiring and communications wiring may be run in the same conduit.
C. Where different wiring classes terminate within the same enclosure, maintain clearances and install barriers per the National Electric Code.
D. Where wiring is required to be installed in conduit, EMT shall be used. Conduit shall be minimum 1/2 inch galvanized EMT. Steel set screw fittings are acceptable for dry interior locations. Steel/watertight compression fittings shall be used for exterior locations and interior locations subject to moisture. Provide conduit seal off fitting where exterior conduits enter the building or between areas of high temperature/moisture differential.
E. Flexible metallic conduit (max. 3 feet) shall be used for connections to motors, actuators, controllers, and sensors mounted on vibration producing equipment. Liquid-tight flexible conduit shall be use in exterior locations and interior locations subject to moisture.
F. Junction boxes shall be provided at all cable splices, equipment termination, and transitions from EMT to flexible conduit. Interior dry location J-boxes shall be galvanized pressed steel, nominal four-inch square with blank cover. Exterior and damp location JH-boxes shall be cast alloy FS boxes with threaded hubs and gasketed covers.
G. Where the space above the ceiling is a supply or return air plenum, the wiring shall be plenum rated. Plenum rated wiring can be run without conduit above suspended ceilings.
H. Fiber optic cable shall include the following sizes; 50/125, 62.5/125 or 100/140.
I. Only glass fiber is acceptable, no plastic.
J. Fiber optic cable shall only be installed and terminated by an experienced contractor. The BAS contractor shall submit to the Engineer the name of the intended contractor of the fiber optic cable with his submittal documents.

3.3 Hardware Installation
A. Installation Practices for Wiring
1. All controllers are to be mounted vertically and per the manufacturer's installation documentation.
2. The 120VAC power wiring to each Ethernet or Remote Site controller shall be a dedicated run, with a separate breaker. Each run will include a separate hot, neutral and ground wire. The ground wire will terminate at the breaker panel ground. This circuit will not feed any other circuit or device.
3. A true earth ground must be available in the building. Do not use a corroded or galvanized pipe, or structural steel.
4. Wires are to be attached to the building proper at regular intervals such that wiring does not droop. Wires are not to be affixed to or supported by pipes, conduit, etc.
5. Conduit in finished areas, will be concealed in ceiling cavity spaces, plenums, furred spaces and wall construction. Exception; metallic surface raceway may be used in finished areas on masonry walls. All surface raceway in finished areas must be color matched to the existing finish within the limitations of standard manufactured colors.
6. Conduit, in non-finished areas where possible, will be concealed in ceiling cavity spaces, plenums, furred spaces, and wall construction. Exposed conduit will run parallel to or at right angles to the building structure.
7. Wires are to be kept a minimum of three (3) inches from hot water, steam, or condensate piping.
8. Where sensor wires leave the conduit system, they are to be protected by a plastic insert.
9. Wire will not be allowed to run across telephone equipment areas.
B. Installation Practices for Field Devices
1. Well-mounted sensors will include thermal conducting compound within the well to insure good heat transfer to the sensor.
2. Actuators will be firmly mounted to give positive movement and linkage will be adjusted to give smooth continuous movement throughout 100 percent of the stroke.
3. Relay outputs will include transient suppression across all coils. Suppression devices shall limit transients to 150% of the rated coil voltage.
4. Water line mounted sensors shall be removable without shutting down the system in which they are installed.
5. For duct static pressure sensors, the high pressure port shall be connected to a metal static pressure probe inserted into the duct pointing upstream. The low pressure port shall be left open to the plenum area at the point that the high pressure port is tapped into the ductwork.
6. For building static pressure sensors, the high pressure port shall be inserted into the space via a metal tube. Pipe the low pressure port to the outside of the building.
C. Enclosures
1. For all I/O requiring field interface devices, these devices where practical will be mounted in a Field Interface Panel (FIP). The Contractor shall provide an enclosure which protects the device(s) from dust, moisture, conceals integral wiring and moving parts.
2. FIPs shall contain power supplies for sensors, interface relays and contactors, and safety circuits.
3. The FIP enclosure shall be of steel construction with baked enamel finish, NEMA 1 rated with a hinged door and keyed lock. The enclosure will be sized for twenty percent spare mounting space. All locks will be keyed identically.
4. All wiring to and from the FIP will be to screw type terminals. Analog or communications wiring may use the FIP as a raceway without terminating. The use of wire nuts within the FIP is prohibited.
5. All outside mounted enclosures shall meet the NEMA-4 rating.
6. The wiring within all enclosures shall be run in plastic track. Wiring within controllers shall be wrapped and secured.
D. Identification
1. Identify all control wires with labeling tape or sleeves using words, letters, or numbers that can be exactly cross-referenced with asbuilt drawings. Use building standard nomenclature and equipment identification names and alfa-numeric characters.
2. All field enclosures, other than controllers, shall be identified with a bakelite nameplate. The lettering shall be in white against a black or blue background.
3. Junction box covers will be marked to indicate that they are a part of the BAS system.
4. All I/O field devices (except space sensors) that are not mounted within FIP's shall be identified with name plates.
5. All I/O field devices inside FIP's shall be labeled.
E. Control System Switch-over
1. Demolition of the existing control system will occur after the new temperature control system is in place including new sensors and new field interface devices.
2. Switch-over from the existing control system to the new system will be fully coordinated with the Owner. A representative of the Owner will be on site during switch-over.
3. The Contractor shall minimize control system downtime during switch-over. Sufficient installation mechanics will be on site so that the entire switch-over can be accomplished in a reasonable time frame.
F. Location
1. The location of sensors shall be coordinated with the chief building engineer.
2. Space humidity or temperature sensors will be mounted away from machinery generating heat, direct light and diffuser air streams.
3. Outdoor air sensors will be mounted on the north building face directly in the outside air. Install these sensors such that the effects of heat radiated from the building or sunlight is minimized.
4. Field enclosures shall be located immediately adjacent to the controller panel(s) to which it is being interfaced.

Commissioning and System Startup
A. Point to Point Checkout
1. Each I/O device (both field mounted as well as those located in FIPs) shall be inspected and verified for proper installation and functionality. A checkout sheet itemizing each device shall be filled out, dated and approved by the Project Manager for submission to the owner or owner's representative.
B. Controller and Workstation Checkout
1. A field checkout of all controllers and front end equipment (computers, printers, modems, etc.) shall be conducted to verify proper operation of both hardware and software. A checkout sheet itemizing each device and a description of the associated tests shall be prepared and submitted to the owner or owner's representative by the completion of the project.
C. System Acceptance Testing
1. All application software will be verified and compared against the sequences of operation. Control loops will be exercised by inducing a set point shift of at least 10% and observing whether the system successfully returns the process variable to set point. Record all test results and attach to the Test Results Sheet.
2. Test each alarm in the system and validate that the system generates the appropriate alarm message, that the message appears at all prescribed destinations (workstations or printers), and that any other related actions occur as defined (i.e. graphic panels are invoked, reports are generated, etc.). Submit a Test Results Sheet to the owner.
3. Perform an operational test of each unique graphic display and report to verify that the item exists, that the appearance and content are correct, and that any special features work as intended. Submit a Test Results Sheet to the owner.
4. Perform an operational test of each third party interface that has been included as part of the automation system. Verify that all points are properly polled, that alarms have been configured, and that any associated graphics and reports have been completed. If the interface involves a file transfer over Ethernet, test any logic that controls the transmission of the file, and verify the content of the specified information.

Required Control Features
A. Industry standard and application/project specific sequence of operation shall be established. Before switch over, become completely familiar with the existing sequence of operation and the set points. All existing sequences, points and set points shall be transferred.
B. Apply proportional (P), proportional plus integral (PI), proportional plus integral plus derivative (PID), or adaptive control loops to specified operating sequences which are appropriate to system operating requirements. Establish mode sequencing and conditioning statements as required to meet the intent of the sequence of operation. Review and modify the initial loop assignments and parameters as necessary to tune systems to satisfactory operation during and after initial start-up and testing.
C. Furnish the sequence of operation specified herein. Provide new control points, devices, additional control loops, relays, sensors, wiring, static pressure accumulators, and other devices as necessary to meet the intent of the sequence of operation. The intent of these specifications is that all control loops operated smoothly, on setpoint, without hunting or unnecessary cycling.
D. All control loop parameters, schedules, setpoints, ranges, alarm conditioning statements, and messages shall be readily adjustable at the BAS operator's terminal.
E. It shall be possible to override any temperature or pressure reset schedule and operate systems at a fixed temperature or pressure setpoint.
F. All sequences may be overridden manually or by a control sequence of higher authority, such as Fire Department override.
G. All HVAC system diagrams, operating schedules, control loop flow charts, equipment status, sensor inputs and control setpoints shall be displayed using two dimensional color graphics at the BAS monitor. Space temperatures, and room configurations in areas with partitions shall be graphically displayed on diagrammatic floor plans. When viewing HVAC control system graphics at the BAS monitor, it shall be possible with a single command to display the following:
1. Relevant instructions for acknowledging alarms and changing parameters, schedules, setpoints, ranges, alarm conditioning statements and alarm messages.
2. Sequence of operation for the system currently on display.

General
a. Coordinate all work with the chief building engineer. Do not program/reprogram unless approved by the management.
b. All other existing sequences and features not listed here shall remain unaltered and shall be transferred to the new BAS.
c. All set point changes shall be adjustable and shall be approved by the chief building engineer. Mechanical systems shall run in the presence of the chief building engineer for at least 2 weeks and until satisfactory operation is established before sequences and set points are finalized and accepted.

Contractor:
PRIME MECHANICAL
SAN JOSE, CA
(408) 428-0400

Project:
ALAMENDA POLICE STATION HVAC CONTROLS REPLACE
1555 OAK STREET, ALAMEDA, CA

THIS DOCUMENT CONTAINS PROPRIETARY INFORMATION WHICH SHALL NOT BE REPRODUCED, TRANSFERRED TO OTHER DOCUMENTS, USED DISCLOSED TO OTHERS, USED FOR MANUFACTURING OR ANY OTHER PURPOSE WITHOUT PRIOR WRITTEN PERMISSION FROM RSD/TOTAL CONTROL.

TOTAL CONTROL
CONTROL SYSTEMS DISTRIBUTOR
a division of RSD
1040 Commercial St. Suite 106
San Jose, Ca. 95112
Ph. (408)-441-1811 Fax (408)-441-1810

Sheet Title:

Revisions

Rev	Date	Change

Job #: xxxxxx
Designed By: $XII
Drawing By: EW
Approved By: NS
Date: AUG 26, 2013
Sheet: 18 OF 18