City of Alameda • California

June 19, 2013

TO: PROSPECTIVE BIDDERS

GROUP 1 – SEWERAGE PUMP STATION RENOVATIONS FOR RELIABILITY AND SAFETY IMPROVEMENTS
NO. P.W. 04-13-11
ADDENDUM NO. 1

Addendum No. 1 is hereby issued to make the following revision to the plans and specifications:

1. Technical Specification
   a. Section 09960-3.13.C.1: Remove Item b. "The interior of the wet well shall be coated per Section 03925."

   b. Replace Section 11312-1.04.B.3 with the following:
      3. Pond-Otis Pump Station (Rail-Mounted)
         a. Flygt Model NP3085.190 (Two Pumps)

1)	Design Capacity per Pump (gpm)	270
2)	Rated Total Pump Head at Design (feet)	15.6
3)	Maximum Rotative Speed (rpm)	1700
4)	Shutoff Head (feet)	26
5)	Motor Horse Power	3
6)	Motor Voltage (3 phase)	230
7)	Discharge Size (inches)	3
8)	Impeller (in)	5.31
9)	Pump Curve:	

0 gpm	25.7 ft
68.8 gpm	23.8 ft
135.2 gpm	21.3 ft
183.4 gpm	19.3 ft
248.8 gpm	16.7 ft
321.2 gpm	13.2 ft
392.1 gpm	10.6 ft
473.3 gpm	7.4 ft

   c. Replace Section 11312-1.04.B.4 with the following:
      4. Channing, Yorkshire-Franciscan, and Grand-Shoreline Pump Stations (Rail-Mounted)
         b. Flygt Model NP3085.190 (Two Pumps per Station)

1)	Design Capacity per Pump (gpm)	130
2)	Rated Total Pump Head at Design (feet)	16
3)	Maximum Rotative Speed (rpm)	1700
4)	Shutoff Head (feet)	20
5)	Motor Horse Power	3

Public Works Department
950 West Mall Square, Room 110
Alameda, California 94501-7575
510.747.7930 • Fax 510.769.6030 • TTY 510.522.7538

Printed on Recycled Paper

6) Motor Voltage (3 phase) 230
7) Discharge Size (inches) 3
8) Impeller (in) 4.69
9) Pump Curve:

0	gpm	20 ft
29	gpm	19.4 ft
86.7	gpm	17.9 ft
130	gpm	16.3 ft
202.3	gpm	13.7 ft
260.1	gpm	11.7 ft
346.7	gpm	8.3 ft
419	gpm	5.8 ft

4. Drawings

a. Reference attached revisions titled "Addendum 1" for the following sheets: 5, 7, 8, 9, 17, 19, 20, 21, 23, 25, 26, 27, 28, 30, 31, 32 and 47. Revisions include, but are not limited to: revised pumps, revised piping, and the addition of VFDs at various pump stations.

APPROVED: _____ 06/20/13
Barbara Hawkins Date
City Engineer

Receipt is hereby acknowledged of Addendum No. 1, **GROUP 1 – SEWERAGE PUMP STATION RENOVATIONS FOR RELIABILITY AND SAFETY IMPROVEMENTS; NO. P.W. 04-13-11**

_____ Date:_____
Company Name / Contractor

By:_____

NOTE: THIS COMPLETE ADDENDUM, SIGNED AND DATED MUST BE RETURNED WITH YOUR BID.

cc: City Clerk

#3 CHANNING PUMP STATION

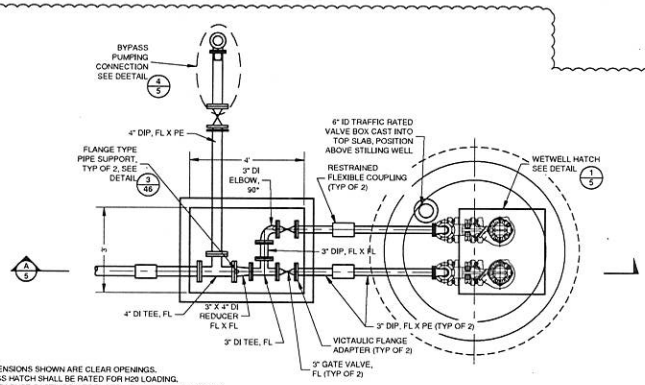

VALVE VAULT NOTES:
1. ACCESS HATCH DIMENSIONS SHOWN ARE CLEAR OPENINGS.
2. VALVE VAULT ACCESS HATCH SHALL BE RATED FOR H20 LOADING.
3. HATCH SHALL BE SYRACUSE CASTINGS MODEL DTD-HD-AOSG, OR APPROVED EQUAL.
4. HATCH SHALL HAVE A CHANNEL FRAME WITH A 1-1/2" DRAIN COUPLER THAT DRAINS TO WETWELL
5. TOP SHALL BE 1/4" DIAMOND PLATE
6. HATCH SHALL BE EQUIPPED WITH HYDRAULIC LIFT SPRINGS TO ASSIST WITH OPENING
7. HATCH SHALL HAVE A RECESSED PADLOCK CLIP FOR LOCKING

IMPROVEMENT PLAN
SCALE:1/2" = 1'

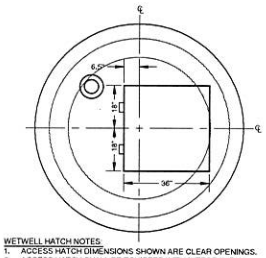

WETWELL HATCH NOTES:
1. ACCESS HATCH DIMENSIONS SHOWN ARE CLEAR OPENINGS.
2. ACCESS HATCH SHALL BE EQUIPPED WITH INTEGRAL FALL PROTECTION.
3. WETWELL ACCESS HATCH SHALL BE RATED FOR 300 PSF.
4. HATCH SHALL BE SYRACUSE CASTINGS MODEL DT-AOSG, OR APPROVED EQUAL.
5. HATCH SHALL HAVE A CHANNEL FRAME WITH A 1-1/2" DRAIN COUPLER THAT DRAINS TO WETWELL
6. HATCH TOP SHALL BE 1/4" DIAMOND PLATE
7. ALL HARDWARE AND HINGES SHALL BE SS

WETWELL HATCH DETAIL 1/5
NO SCALE

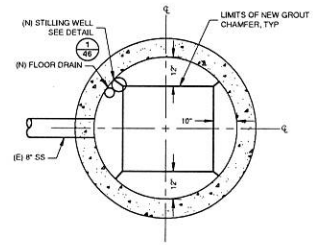

DETAIL NOTES:
1. ALL NEW CHAMFERS SHALL BE ANCHORED WITH REBAR. SEE SHEET NOTES AND SECTION A/5.

LIMITS OF CHAMFER DETAIL 3/5
SCALE:1/2" = 1'

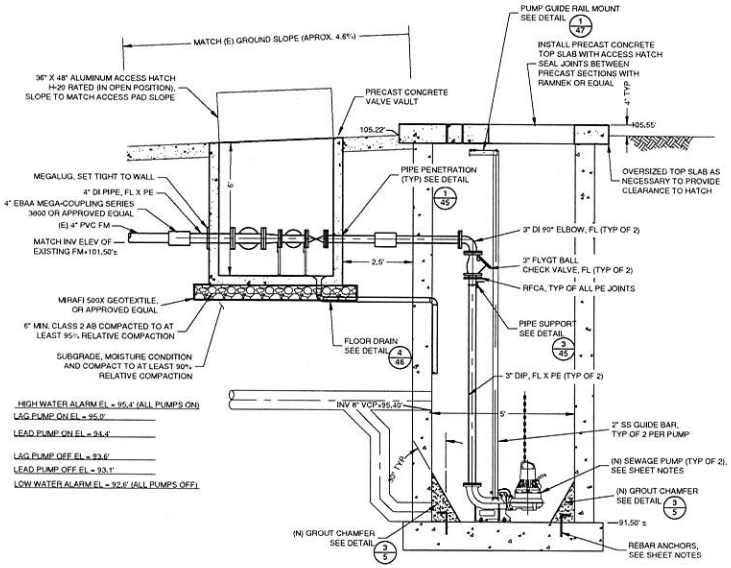

IMPROVEMENT SECTION A/5
SCALE:1/2" = 1'

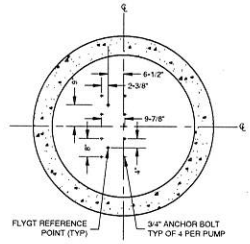

PUMP MOUNTING DETAIL 2/5
NO SCALE

SHEET NOTES:
1. ALL FORCE MAIN CONNECTIONS SHALL BE RESTRAINED AGAINST THRUST.
2. CONTRACTOR SHALL FIELD VERIFY EXISTING PIPE SIZES, MATERIALS, ELEVATIONS AND DISTANCES PRIOR TO ORDERING AND FABRICATING MATERIALS.
3. EXACT LOCATION OF FORCE MAIN IS UNKNOWN. ADDITIONAL FITTINGS AND PIPE MAY BE REQUIRED TO CONNECT TO EXISTING FORCE MAIN. CONTRACTOR SHALL LOCATE EXISTING FORCE MAIN PRIOR TO CONSTRUCTING ANY ASSOCIATED ITEMS. THE VALVE VAULT SHALL BE POSITIONED TO MATCH THE ALIGNMENT OF THE EXISTING FORCE MAIN.
4. INSTALL REBAR ANCHORS FOR ALL GROUT CHAMFERS. REBAR ANCHORS SHALL BE #5 REBAR 12" IN TOTAL LENGTH, DRILLED AND EPOXIED 3" INTO EXISTING INVERT. SPACE ANCHORS AT 3' ON CENTER AND PROVIDE 2" MINIMUM CLEARANCE TO LIMIT OF GROUT.
4. ACTUAL WETWELL INVERT MAY BE HIGHER THAN INDICATED, CONTRACTOR SHALL VERIFY WETWELL INVERT ELEVATION PRIOR TO CONSTRUCTION AND ADJUST PUMP CONTROL LEVELS BASED ON DISTANCE FROM FINAL WETWELL INVERT.

CHANNING PUMP NOTES:
PUMPS SHALL BE INDUSTRIAL SEWAGE PUMPS, RATED FOR USE IN CLASS 1, DIVISION 1, GROUP D LOCATIONS. PUMP SHALL BE SUPPLIED WITH INTEGRAL MOISTURE AND TEMPERATURE SENSORS. PUMP SHALL BE FLYGT MODEL NP 3085 MT WITH THE FOLLOWING CHARACTERISTICS:

VOLTAGE: 230V, AC, 60 HZ
PHASES: THREE (3)
HORSEPOWER: 3
IMPELLER DIAMETER: 4.69 INCHES (119 MM)
RATING POINT: 130 GPM AT 16 FEET OF HEAD
DISCHARGE SIZE: 3 INCHES

THE CITY HAS STANDARDIZED THE PUMP MANUFACTURER, NO SUBSTITUTIONS WILL BE ACCEPTED.

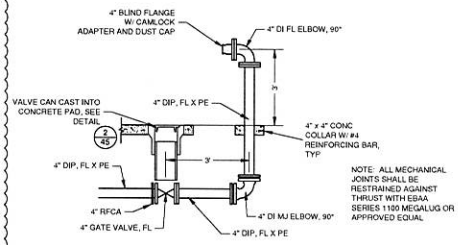

NOTE: ALL MECHANICAL JOINTS SHALL BE RESTRAINED AGAINST THRUST WITH EBAA SERIES 1100 MEGALUG OR APPROVED EQUAL

BYPASS PUMPING DETAIL 4/5
NO SCALE

NO	REVISIONS	DATE	APPR
1	ADDENDUM 1	6/18/13	

REGISTERED PROFESSIONAL ENGINEER — GUSTAV M. ANDERSON — No. 58813 — CIVIL — STATE OF CALIFORNIA

Schaaf & Wheeler
CONSULTING CIVIL ENGINEERS
1171 HOMESTEAD RD. STE. 255
SANTA CLARA, CA 95050
(408) 246-4848

CITY OF ALAMEDA
GROUP 1 - SEWERAGE PUMP STATION RENOVATIONS FOR RELIABILITY AND SAFETY IMPROVEMENTS
CHANNING SECTIONS

DATE 5/21/13
SCALE AS SHOWN
DESIGN GMA
DRAWN GMA
CHECKED BLS

DWG 9363 CASE 95

SHEET 5 OF 49

D:\JOBS\PWD\07-Phase 1 Pump Stations\Drawing\Phase 1_WORKING Group 1\FINAL SUBMITTAL 052213 Addendum 1 - Revised Pump Group_1_Addendum 1 061913.dwg, 6/19/2013 1:51 PM

SHEET NOTES:

1. PROVIDE 2" PVC CONDUIT. INSTALL IN ACCORDANCE WITH ALAMEDA MUNICIPAL POWER (AMP) STANDARD DETAIL 1-L-412.
2. PROVIDE 2"C FOR COAX CABLE CONNECTION FROM (E) ANTENNA TO (R) SCADA SYSTEM.
3. PROVIDE IN GROUND PULLBOX FOR PUMP POWER AND MONOTORING CONTROL CIRCUITS, SIZE 6T, CHRISTY B1730 WITH 12" EXTENSION (17" X 30") REINFORCED TRAFFIC RATED CONCRETE BOX WITH BOLT DOWN, STEEL CHECKER PLATE COVER.
4. PROVIDE IN GROUND PULLBOX SIZE 5T, CHRISTY B1324 WITH 12" EXTENSION (13" X 24") REINFORCED TRAFFIC RATED CONCRETE BOX WITH BOLT DOWN, STEEL CHECKER PLATE COVER.
5. PROVIDE (2) 1" PVC COATED RSC CONDUIT FOR PUMP POWER, (1) 1"C PVC COATED RSC FOR MOISTURE AND TEMPERATURE MONITORING CONTROL CIRCUITS FOR WET WELL PUMPS. SEE ONE-LINE DIAGRAM FOR CABLE SIZES.
6. PROVIDE (2) 2 1/2" PVC COATED RSC CONDUIT FOR PUMP CABLING.
7. PROVIDE (2) 2 1/2" PVC COATED RSC FOR LEVEL TRANSMITTER AND HIGH AND LOW FLOAT CABLES.
8. PROVIDE 1 1/2"C FOR FEEDER TO MCC. SEE ONE-LINE DIAGRAM FOR CABLE SIZE.
9. COORDINATE EXACT CONDUIT STUB UP LOCATIONS WITH EQUIPMENT MANUFACTURER SHOP DRAWINGS.
10. PROVIDE 3/4" CONDUIT WITH
    2 #12+12 (G) PNL A, CKT 2 FOR JACKET HEATER
    2 #12 +12 (G) PNL. A CKT 4 FOR BATTERY CHARGER
11. PROVIDE 2 #10 IN 3/4"C FOR GENERATOR START SIGNAL WIRES.
12. PROVIDE 1 1/2"C FROM ATS TO GENERATOR. SEE ONE-LINE DIAGRAM FOR CABLE SIZES.
13. PROVIDE IN GROUND PULLBOX FOR FEEDER TO MCC, SIZE 6T, CHRISTY B1730 WITH 12" EXTENSION (17" X 30") REINFORCED TRAFFIC RATED CONCRETE BOX WITH BOLT DOWN, STEEL CHECKER PLATE COVER.
14. LIGHTING FIXTURE MOUNTED ON POLE AT 10'-0". LIGHTING FIXTURE: KIM LIGHTING ARCHETYPE, CAT. # 1SA-SAR2-60L-4K-120-DB POLE: CAT. #PRA10-4125-SA-DB.
15. PROVIDE 1" PVC CONDUIT WITH 2 #12 + 1 #12 (G), PNL A, CKT. #11, VIA LIGHT SWITCH IN CONTROL PANEL FOR SITE LIGHTING.

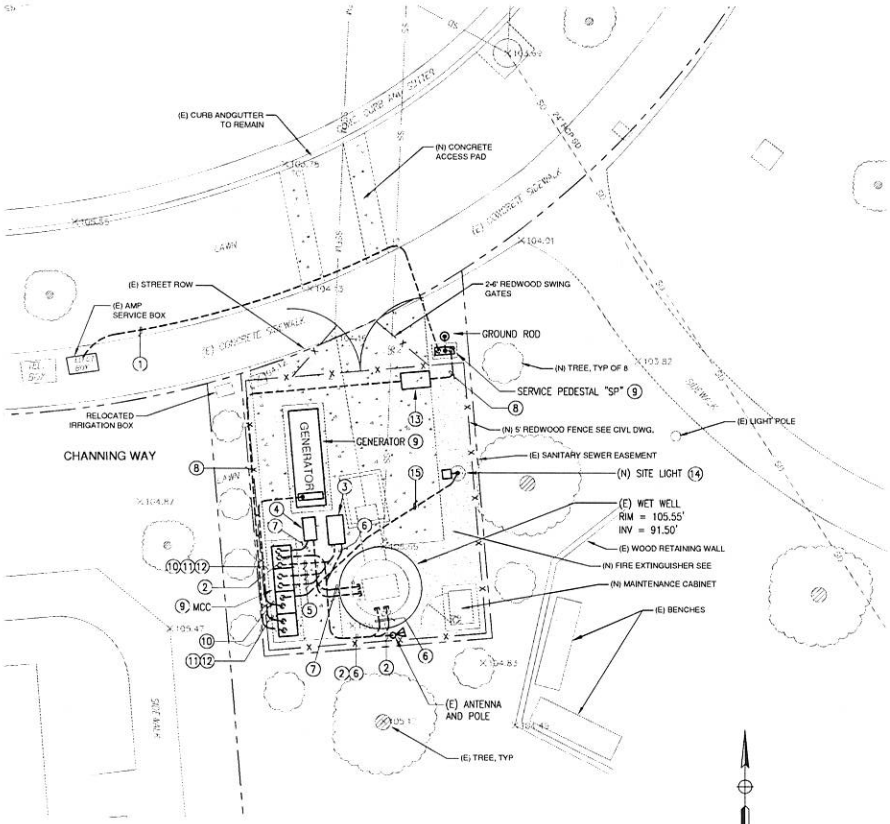

2 CHANNING SITE PLAN
SCALE: 1" = 5'-0"

0 5' 10' 15'
SCALE: 1" = 5'-0"

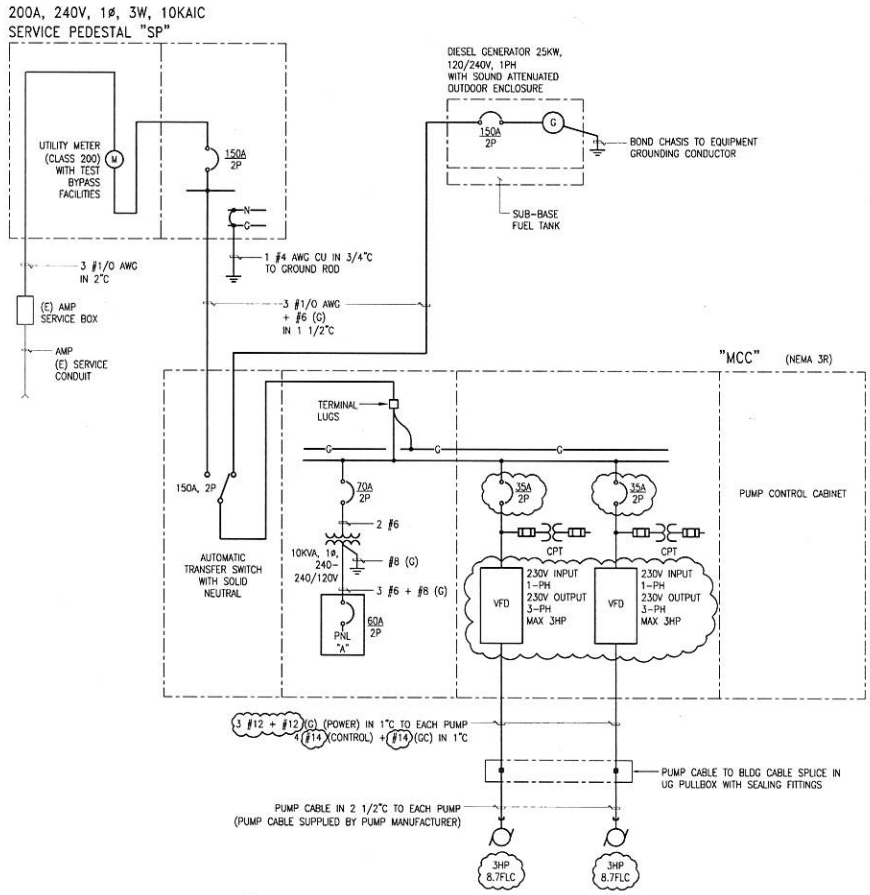

1 CHANNING ONE-LINE DIAGRAM
NO SCALE

NO	REVISIONS	DATE	APPR
1	ADDENDUM #1	6/19/13	JH

REGISTERED PROFESSIONAL ENGINEER JULIO C. NERQUIZ No. 9580 Exp. 9/30/14 ELECTRICAL STATE OF CALIFORNIA

MTH engineers, inc.
3350 scott blvd., bldg. 11
santa clara, ca 95054
(408) 988-4551
FAX (408) 986-9827
PROJECT NO. 11697-01

CITY OF ALAMEDA
GROUP 1 - SEWERAGE PUMP STATION RENOVATIONS FOR RELIABILITY AND SAFETY IMPROVEMENTS
CHANNING PUMP STATION
ONE-LINE & SITE PLAN - NEW WORK

DATE	5/21/13
SCALE	AS SHOWN
DESIGN	KM
DRAWN	VM
CHECKED	JH

DWG 9363 CASE 95

E1.1

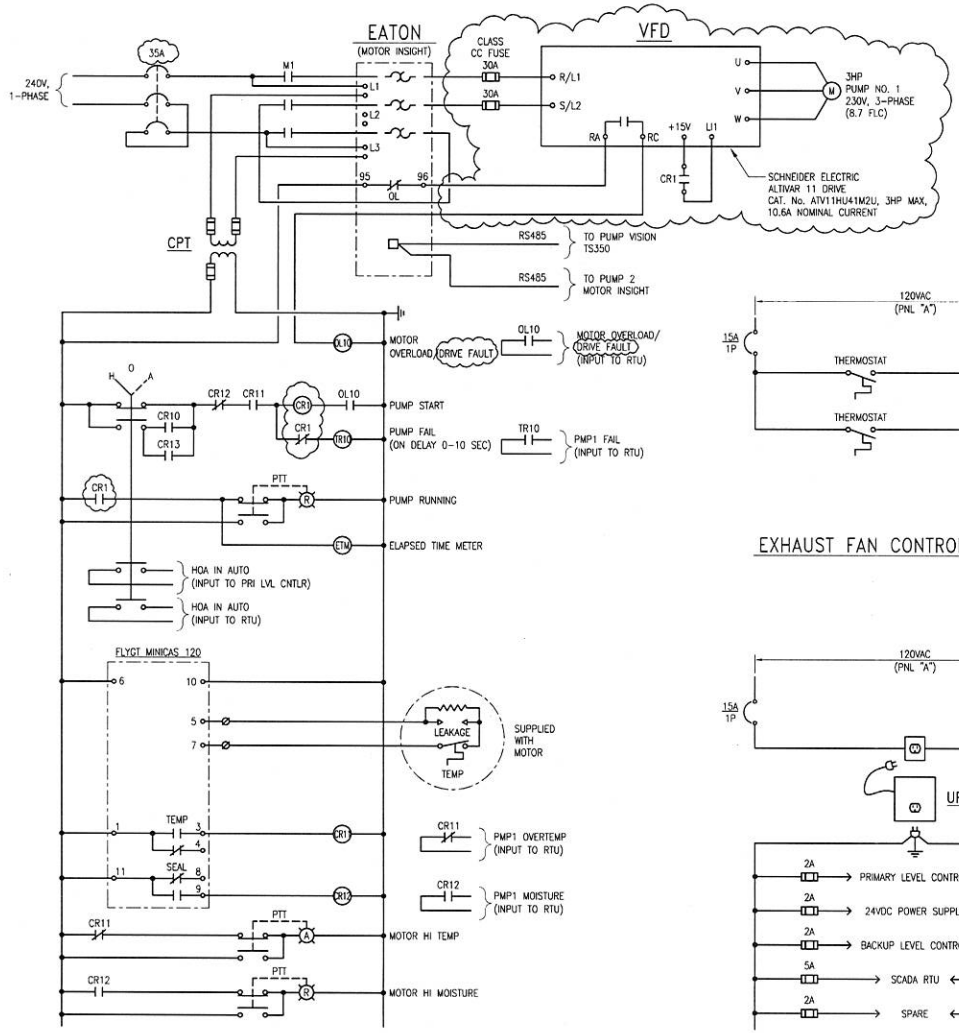

FVNR PUMP No. 1 CONTROL SCHEMATIC DIAGRAM

(SIMILAR FOR PUMP No. 2)

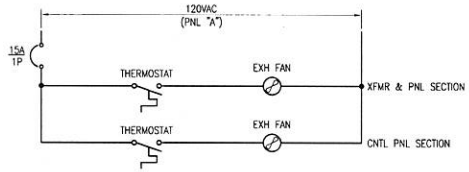

EXHAUST FAN CONTROL SCHEMATIC

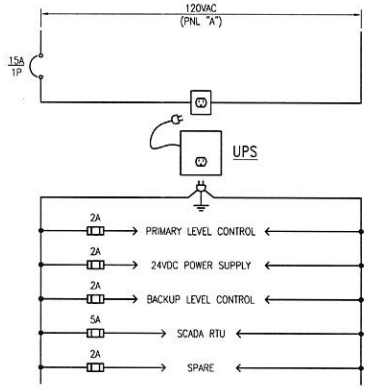

120V UPS SYSTEM SCHEMATIC

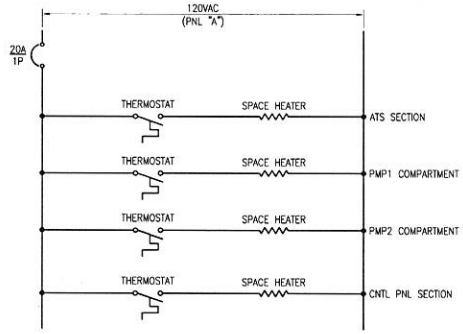

SPACE HEATER CONTROL SCHEMATIC

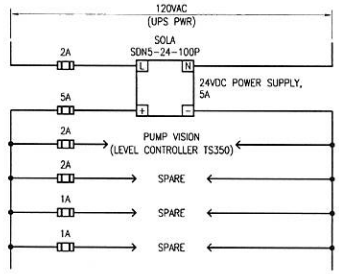

24VDC SYSTEM SCHEMATIC

NO	REVISIONS	DATE	APPR
1	ADDENDUM #1	6/19/13	JH

REGISTERED PROFESSIONAL ENGINEER
DAVID C. HERGOLD
No. 9580
Exp. 9/30/14
ELECTRICAL
STATE OF CALIFORNIA

MH engineers, inc.
3350 scott blvd, bldg 11
santa clara, ca 95054
(408) 988-4464
FAX (408) 988-9628
PROJECT NO. 11697-01

CITY OF ALAMEDA
GROUP 1 - SEWERAGE PUMP STATION RENOVATIONS
FOR RELIABILITY AND SAFETY IMPROVEMENTS
CHANNING PUMP STATION
CONTROL SCHEMATIC DIAGRAM

DATE	5/21/13
SCALE	AS SHOWN
DESIGN	KM
DRAWN	YM
CHECKED	JH

DWG 9363 CASE 95

E2.1

FILE: M:\11697-01 Alameda Pumps\CHN-E21.dwg 05/31/11 08:51 by ymm
XREF: M:\11697-01 Alameda Pumps\VPS-EDR.dwg
XREF: M:\11697-01 Alameda Pumps\Phase1_Group1B_CHN-E21.dwg, 6/19/2013 3:42 PM
SCALE = BORDER = M:\11697-01 Alameda Pumps15_Alameda_Phase1_Group1B_CHN-E21.dwg

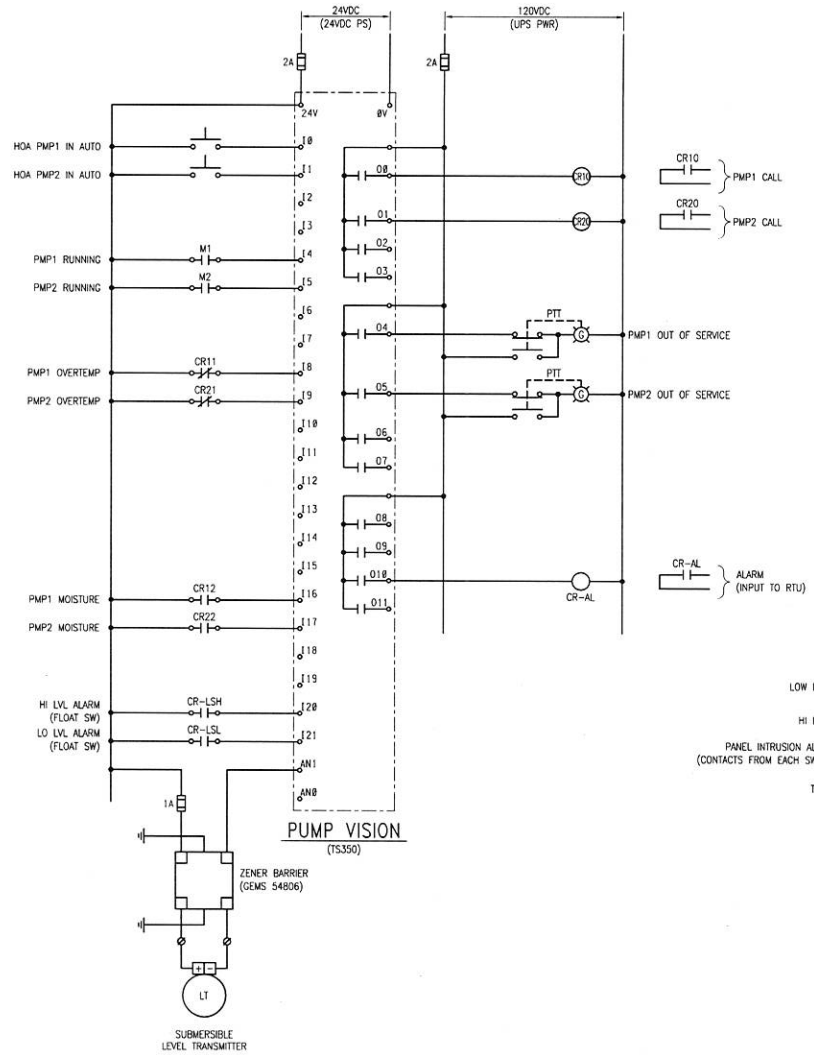

PUMP VISION
(TS350)

PRIMARY LEVEL CONTROLLER

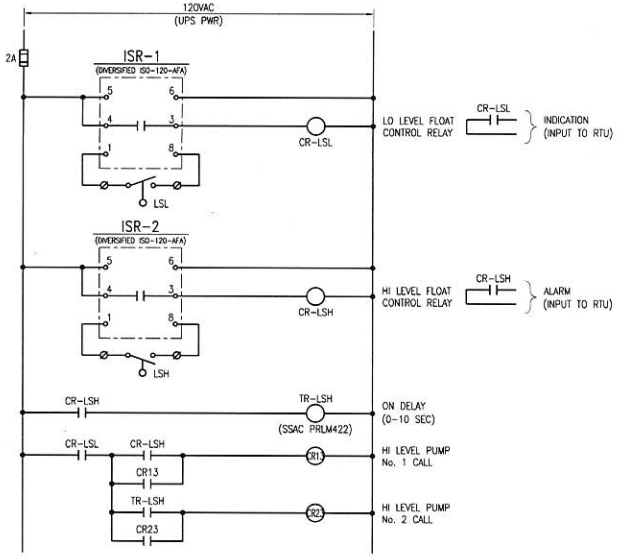

BACKUP LEVEL CONTROL

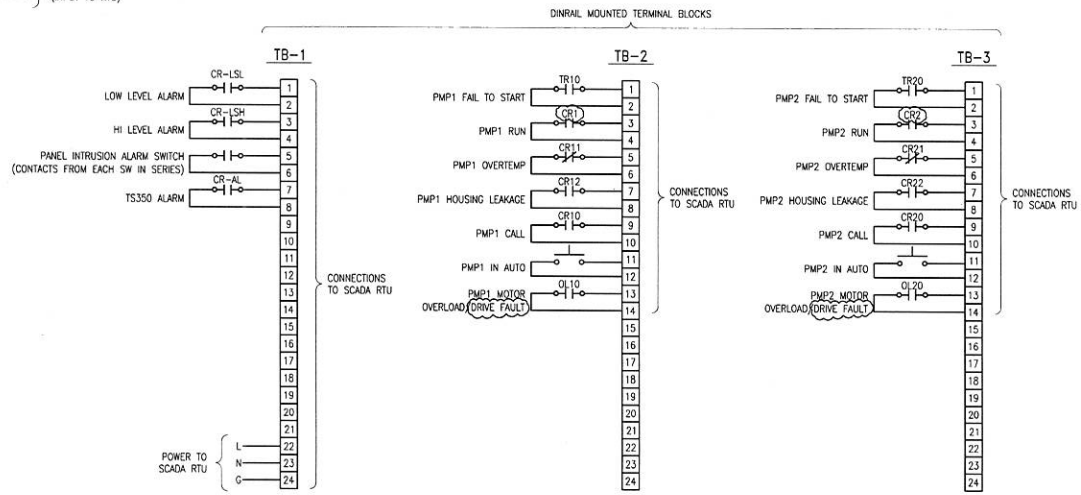

SCADA RTU TERMINATION POINTS

NO.	REVISIONS	DATE	APPR
1	ADDENDUM #1	6/19/13	JR
2			
3			
4			
5			
6			

REGISTERED PROFESSIONAL ENGINEER
JULIO C. NEROZZI
No. 9580
Exp. 9/30/14
STATE OF CALIFORNIA

MJH engineers, inc.
3350 scott blvd., bldg. 11
santa clara, ca 95054
(408) 986-9158
FAX (408) 986-9627
PROJECT NO. 11697-01

CITY OF ALAMEDA
GROUP 1 - SEWERAGE PUMP STATION RENOVATIONS
FOR RELIABILITY AND SAFETY IMPROVEMENTS
CHANNING PUMP STATION
SCHEMATIC DIAGRAM

DATE	5/13
SCALE	AS SHOWN
DESIGN	KM
DRAWN	VM
CHECKED	JR

DWG 9363 CASE 95

E2.2

FILE: M:\11697-01 Alameda Pumps (NCH+E2).dwg 05/29/11 16:21 by vong SCALE = BORDER =
XREF: M:\11697-01 Alameda Pumps\UPS_B2R.dwg XREF: M:\11697-01 Alameda Pumps\DUE PHASE-PUMPS - XREF1.dwg
M:\11697-01 Alameda Pumps\Phase-1_Group-1\Ch+E2.2.dwg, 6/19/2013 3:43 PM

#19 YORKSHIRE-FRANCISCAN PUMP STATION

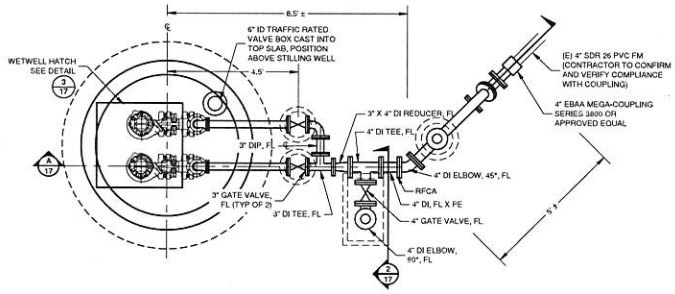

IMPROVEMENT PLAN

SCALE: 1/2" = 1'

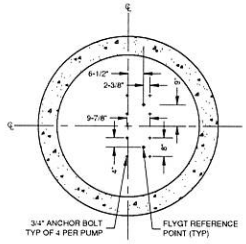

PUMP MOUNTING DETAIL 1/17

NO SCALE

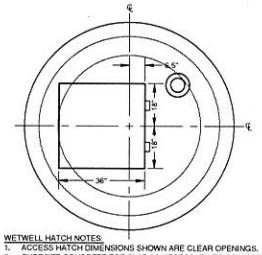

WETWELL HATCH NOTES:
1. ACCESS HATCH DIMENSIONS SHOWN ARE CLEAR OPENINGS.
2. OVERSIZE CONCRETE TOP SLAB AS NECESSARY TO PROVIDE H-20 RATED STRUCTURE AND REQUIRED CLEARANCES
3. ACCESS HATCH SHALL BE EQUIPPED WITH INTEGRAL FALL PROTECTION.
4. WETWELL ACCESS HATCH SHALL BE STREET RATED FOR CONTINUOUS H-20 LOADING.
5. HATCH SHALL BE EAST JORDAN IRON WORKS MODEL 8217 HD, EXTRA HEAVY DUTY HATCH, OR APPROVED EQUAL.
6. HATCH SHALL BE EQUIPPED WITH A SS SPRING ASSIST THAT REDUCES THE LIFTING FORCE TO LESS THAN 50 LBS.
7. HATCH SHALL HAVE BLACK ASPHALTIC COATING.

WETWELL HATCH DETAIL 3/17

NO SCALE

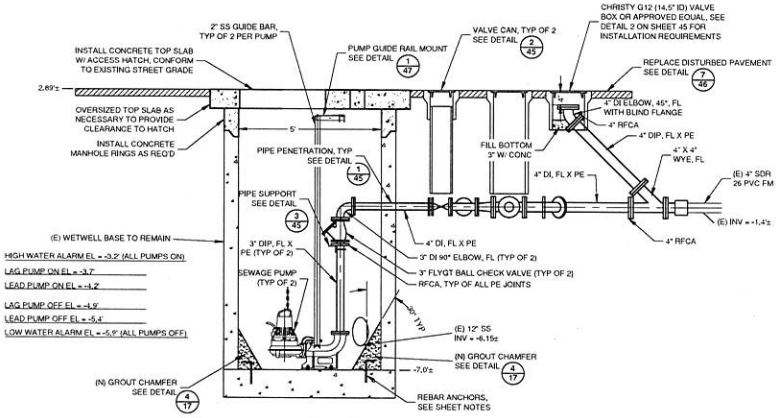

IMPROVEMENT SECTION A/17

SCALE: 1/2" = 1'

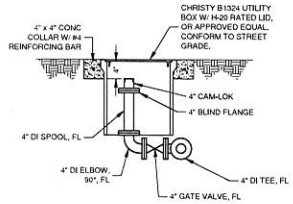

BYPASS PUMP CONNECTION DETAIL 2/17

NO SCALE

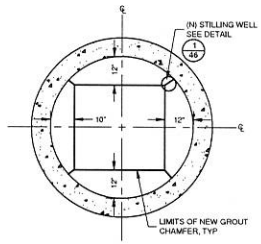

DETAIL NOTES:
1. ALL NEW CHAMFERS SHALL BE ANCHORED WITH REBAR. SEE SHEET NOTES AND SECTION A/17.

LIMITS OF CHAMFER DETAIL 4/17

SCALE: 1/2" = 1'

SHEET NOTES:
1. ALL FORCE MAIN CONNECTIONS SHALL BE RESTRAINED AGAINST THRUST.
2. CONTRACTOR SHALL FIELD VERIFY EXISTING PIPE SIZES, MATERIALS, ELEVATIONS AND DISTANCES PRIOR TO ORDERING AND FABRICATING MATERIALS.
4. ACTUAL WETWELL INVERT MAY BE HIGHER THAN INDICATED, CONTRACTOR SHALL VERIFY WETWELL INVERT ELEVATION PRIOR TO CONSTRUCTION AND ADJUST PUMP CONTROL LEVELS BASED ON DISTANCE FROM FINAL WETWELL INVERT.

YORKSHIRE FRANCISCAN PUMP NOTES:
PUMP SHALL BE AN INDUSTRIAL SEWAGE PUMP, RATED FOR USE IN CLASS 1, DIVISION 1, GROUP D LOCATIONS. PUMP SHALL BE SUPPLIED WITH INTEGRAL MOISTURE AND TEMPERATURE SENSORS. PUMP SHALL BE FLYGT MODEL NP 3085 MT WITH THE FOLLOWING CHARACTERISTICS:

VOLTAGE: 230V, AC, 60 HZ
PHASES: THREE (3)
HORSEPOWER: 3
IMPELLER DIAMETER: 4.69 INCHES (119 MM)
RATING POINT: 130 GPM AT 16 FEET OF HEAD
DISCHARGE SIZE: 3 INCHES

THE CITY HAS STANDARDIZED THE PUMP MANUFACTURER, NO SUBSTITUTIONS WILL BE ACCEPTED.

NO	REVISIONS	DATE	APPR
1	ADDENDUM 1	6-19-13	

REGISTERED PROFESSIONAL ENGINEER, GREGORY L. SPICK, No. 58813, CIVIL, STATE OF CALIFORNIA

Schaaf & Wheeler
CONSULTING CIVIL ENGINEERS
1171 HOMESTEAD RD. STE. 255
SANTA CLARA, CA 95050
(408) 246-4848

CITY OF ALAMEDA
GROUP 1 - SEWERAGE PUMP STATION RENOVATIONS
FOR RELIABILITY AND SAFETY IMPROVEMENTS
YORKSHIRE-FRANCISCAN PROFILE

DATE: 5-21-13
SCALE: AS SHOWN
DESIGN: GMA
DRAWN: GMA
CHECKED: BLS

DWG 9363 CASE 95

D:\JOBS\PWD\07-Phase 1 Pump Stations\Drawings\Phase 1_WORKING\Group 1\FINAL SUBMITTAL 052213\Addendum 1 - Revised Pumps\Group_1_Addendum 1 061913.dwg, 6/19/2013 1:32 PM

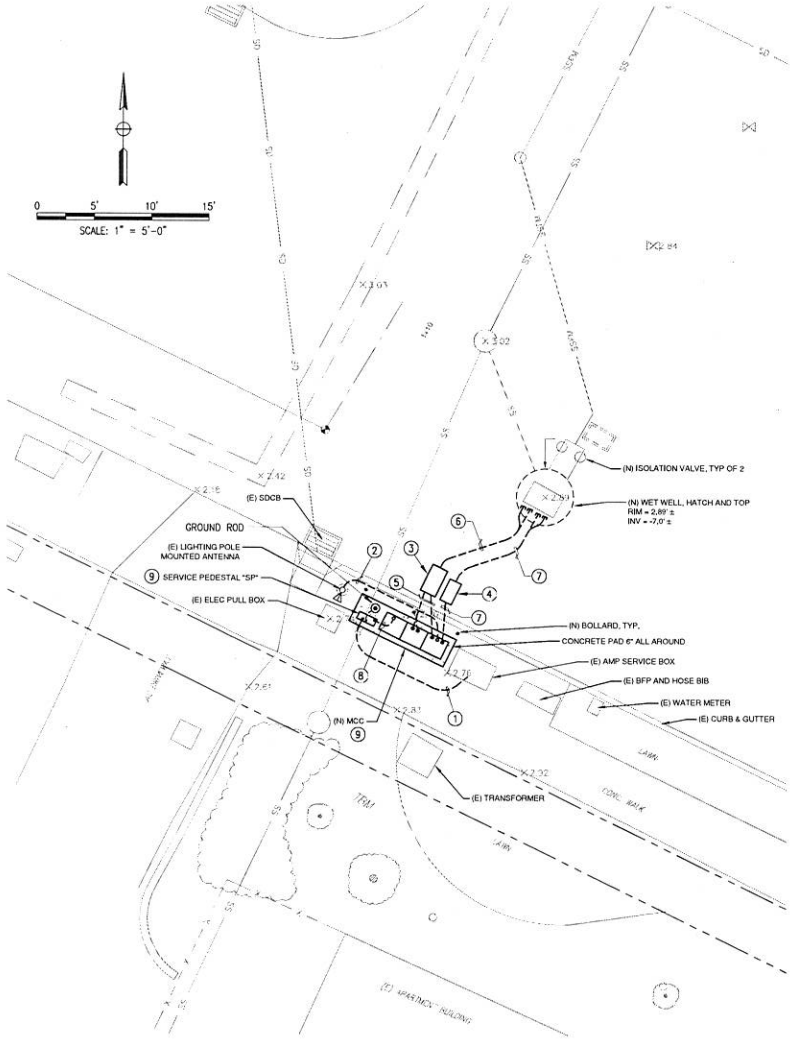

2 YORKSHIRE/FRANCISCAN SITE PLAN
SCALE: 1" = 5'-0"

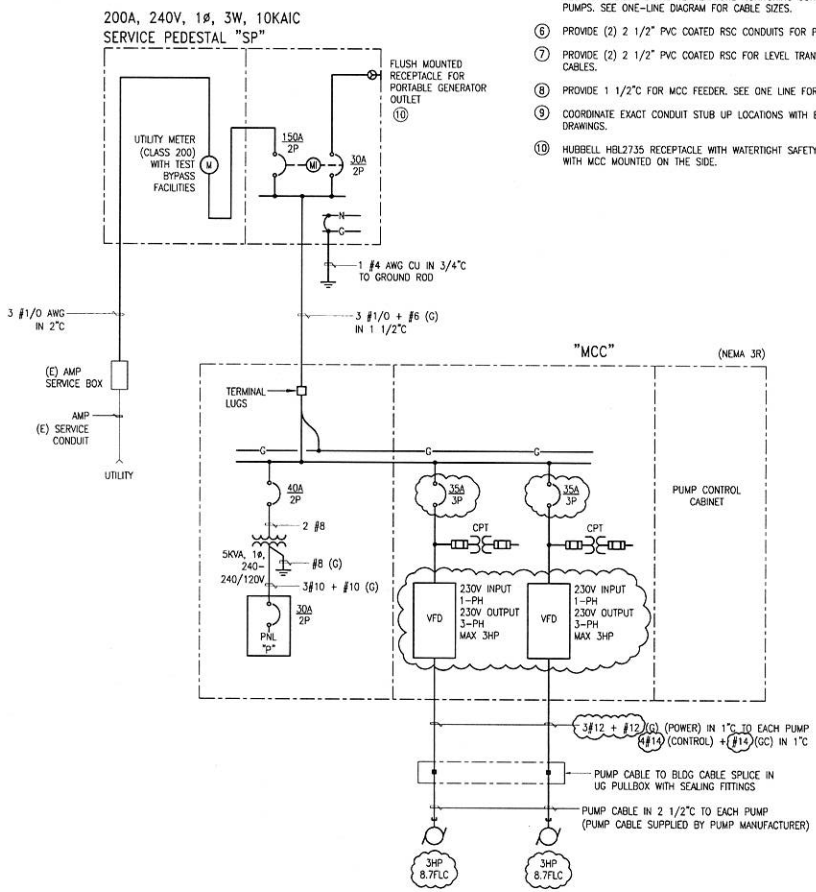

1 YORKSHIRE/FRANCISCAN ONE-LINE DIAGRAM
NO SCALE

SHEET NOTES:

1. PROVIDE 2" PVC CONDUIT. INSTALL IN ACCORDANCE WITH ALAMEDA MUNICIPAL POWER (AMP) STANDARD DETAIL 1-L-412.
2. INTERCEPT (E) CONDUIT AND EXTEND TO MCC CONTROL SECTION FOR COAX CABLE CONNECTION FROM (E) ANTENNA TO (R) SCADA SYSTEM.
3. PROVIDE IN GROUND PULL BOX FOR PUMP POWER AND MONITORING CONTROL CIRCUITS, SIZE 6T, CHRISTY B1730 WITH 12" EXTENSION (17" x 30") REINFORCED TRAFFIC RATED CONCRETE BOX WITH BOLT DOWN, STEEL CHECKER PLATED COVER.
4. PROVIDE IN GROUND PULL BOX FOR CONTROLS, SIZE 5T, CHRISTY B1324 WITH 12" EXTENSION (13" x 24") REINFORCED TRAFFIC RATED CONCRETE BOX WITH BOLT DOWN, STEEL CHECKER PLATED COVER.
5. PROVIDE (2) 1" PVC COATED RSC CONDUITS FOR PUMP POWER, AND (1) 1" PVC COATED RSC FOR MOISTURE AND TEMPERATURE MONITORING CONTROL CIRCUITS FOR WET WELL PUMPS. SEE ONE-LINE DIAGRAM FOR CABLE SIZES.
6. PROVIDE (2) 2 1/2" PVC COATED RSC CONDUITS FOR PUMP CABLING.
7. PROVIDE (2) 2 1/2" PVC COATED RSC FOR LEVEL TRANSMITTER AND HIGH AND LOW FLOAT CABLES.
8. PROVIDE 1 1/2"C FOR MCC FEEDER. SEE ONE LINE FOR FEEDER CABLE SIZE.
9. COORDINATE EXACT CONDUIT STUB UP LOCATIONS WITH EQUIPMENT MANUFACTURER SHOP DRAWINGS.
10. HUBBELL HBL2735 RECEPTACLE WITH WATERTIGHT SAFETY SHROUD HBL2735SW. PROVIDE WITH MCC MOUNTED ON THE SIDE.

NO	REVISIONS	DATE	APPR
1	ADDENDUM #1	6/19/13	JH

REGISTERED PROFESSIONAL ENGINEER
MILO C. HERRICK
No. 9580
Exp. 9/30/14
ELECTRICAL
STATE OF CALIFORNIA

MTH engineers, inc.
3350 scott blvd, bldg. 11
santa clara, ca 95054
(408) 986-9627
FAX (408) 986-9623
PROJECT NO. 11697-01

CITY OF ALAMEDA
GROUP 1 - SEWERAGE PUMP STATION RENOVATIONS
FOR RELIABILITY AND SAFETY IMPROVEMENTS
YORKSHIRE-FRANCISCAN PUMP STATION
ONE-LINE & SITE PLAN - NEW WORK

DATE	5/21/13
SCALE	AS SHOWN
DESIGN	KM
DRAWN	VM
CHECKED	JH

DWG 9363 CASE 95

E1.1

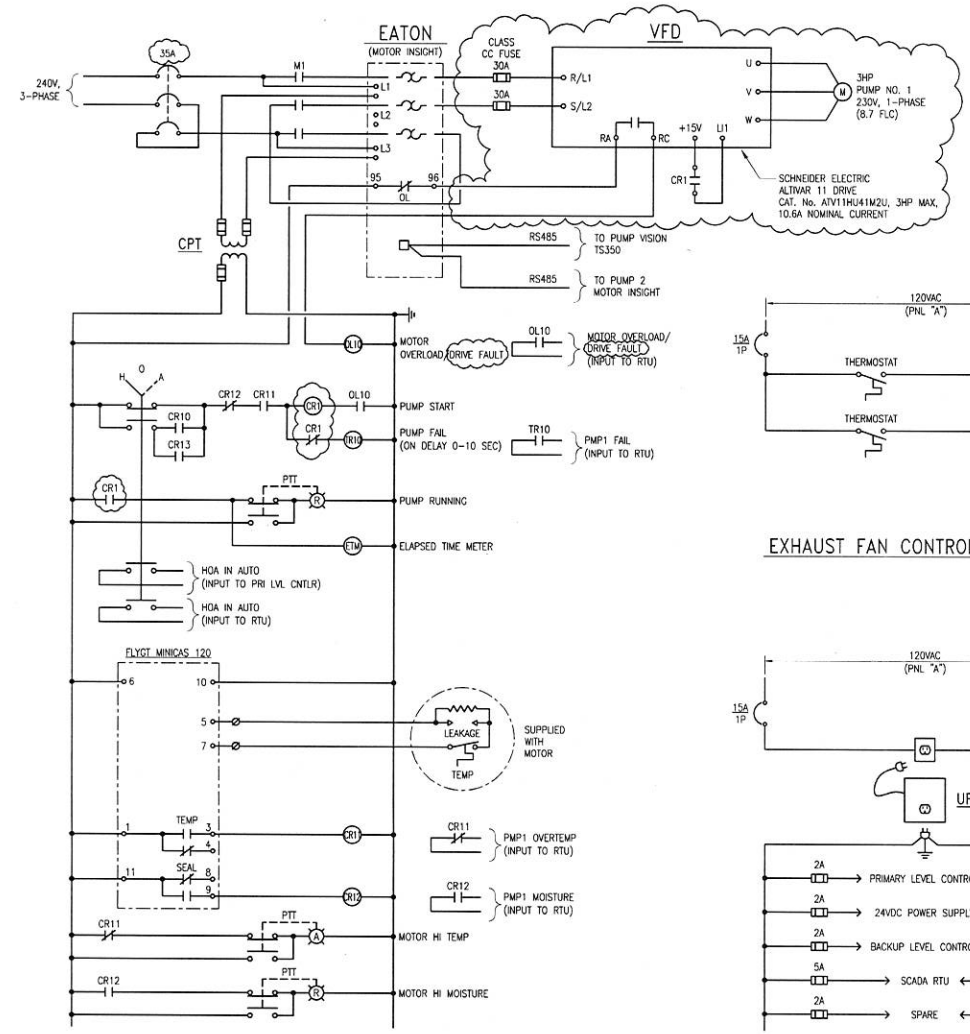

FVNR PUMP No. 1 CONTROL SCHEMATIC DIAGRAM

(SIMILAR FOR PUMP No. 2)

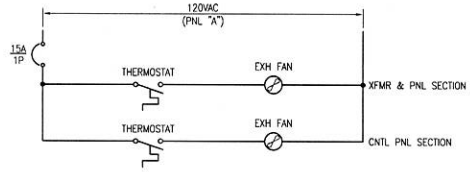

EXHAUST FAN CONTROL SCHEMATIC

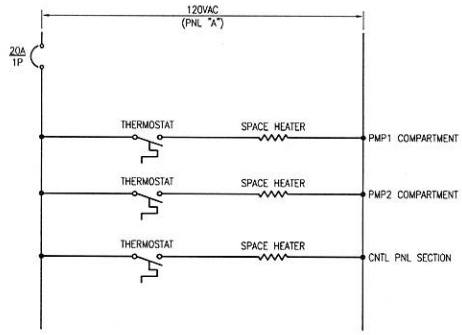

SPACE HEATER CONTROL SCHEMATIC

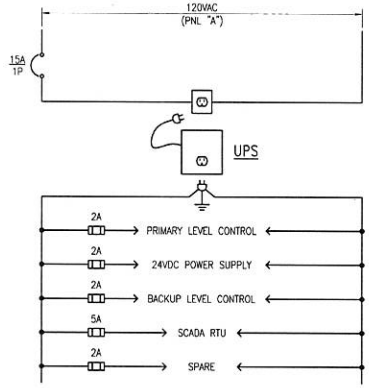

120V UPS SYSTEM SCHEMATIC

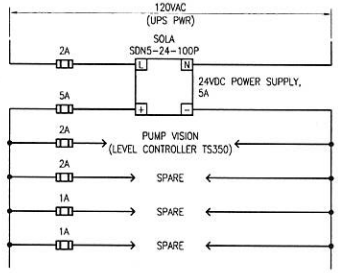

24VDC SYSTEM SCHEMATIC

NO	REVISIONS	DATE	APPR
A	ADDENDUM #1	6/19/13	JH

REGISTERED PROFESSIONAL ENGINEER — DAVID C. NEROZZI — No. 9580 — Exp. 9/30/14 — ELECTRICAL — STATE OF CALIFORNIA

MTH engineers, inc.
3350 scott blvd., bldg 11
santa clara, ca 95054
(408) 988-4467
FAX (408) 988-9622

PROJECT NO. 11697-01

CITY OF ALAMEDA
GROUP 1 - SEWERAGE PUMP STATION RENOVATIONS
FOR RELIABILITY AND SAFETY IMPROVEMENTS
YORKSHIRE-FRANCISCAN PUMP STATION
CONTROL SCHEMATIC DIAGRAM

DATE	5/21/13
SCALE	AS SHOWN
DESIGN	KM
DRAWN	VM
CHECKED	JH

DWG 9363 CASE 95

E2.1

FILE: M:\11697-01 Alameda Pumps\VSF-E21.dwg 05/31/11 08:51 by vu003
XREF: M:\11697-01 Alameda Pumps\UPS-BDR.dwg
M:\11697-01 Alameda Pumps\5_Alameda_Phase1_Group100_VSF-E21.dwg, 6/19/2013 3:46 PM
SCALE = BORDER = SCHEMATIC.dwg

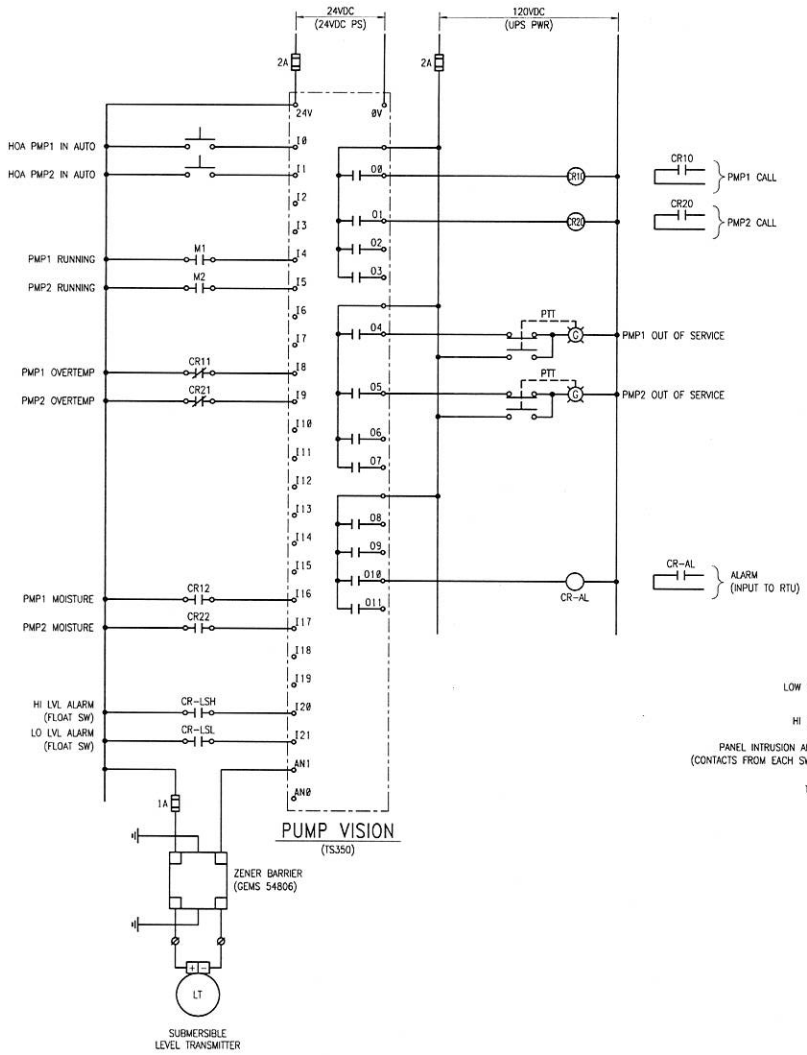

PRIMARY LEVEL CONTROLLER

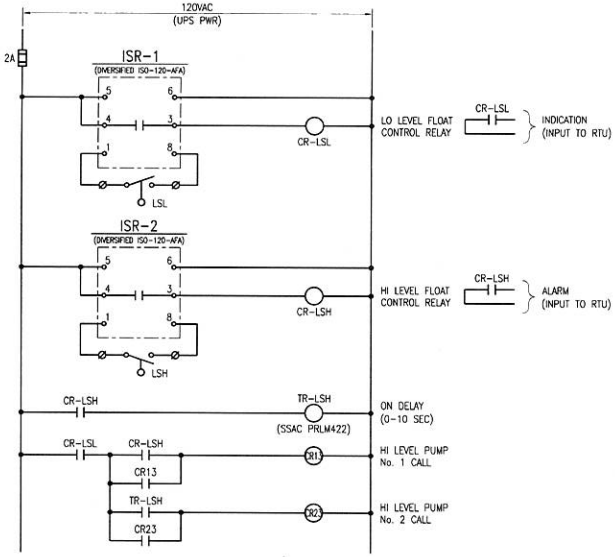

BACKUP LEVEL CONTROL

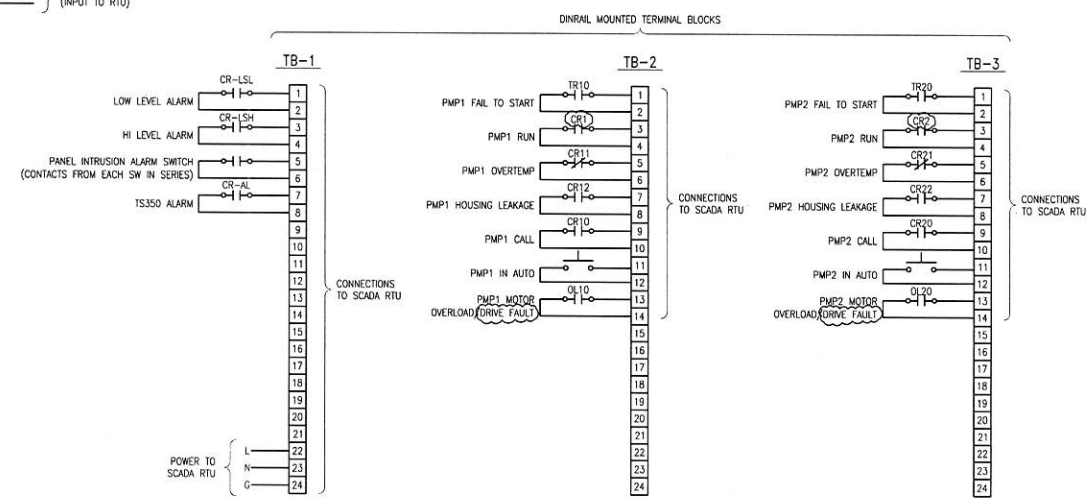

SCADA RTU TERMINATION POINTS

NO	REVISIONS	DATE	APPR
1	ADDENDUM #1	6/19/13	JH

REGISTERED PROFESSIONAL ENGINEER
JULIO C. HERRERA
No. 9580
Exp. 9/30/14
ELECTRICAL
STATE OF CALIFORNIA

engineers, inc.
3350 scott blvd, bldg. 11
santa clara, ca. 95054
(408) 986-9627
FAX (408) 986-9629
PROJECT NO. 11697-01

CITY OF ALAMEDA
GROUP 1 - SEWERAGE PUMP STATION RENOVATIONS
FOR RELIABILITY AND SAFETY IMPROVEMENTS
YORKSHIRE-FRANCISCAN PUMP STATION
SCHEMATIC DIAGRAM

DATE	5.21.13	
SCALE	AS SHOWN	
DESIGN	KM	
DRAWN	VM	
CHECKED	JH	

DWG 9363 CASE 95

E2.2

FILE: M:\11697-01 Alameda Pumps\YSF-E22.dwg 05/29/11 15:53 by vaong
M:\11697-01 Alameda Pumps\YSF-E22.dwg 6/19/2013 3:41 PM
M:\11697-01 Alameda Pumps\Shade\Cadds\YSF-E22.dwg 6/19/2013 3:41 PM
SCALE = BORDER = 11697-01 Alameda Pumps (NON PHASE-PUMPS - VREF1.dwg)

#20 POND-OTIS PUMP STATION

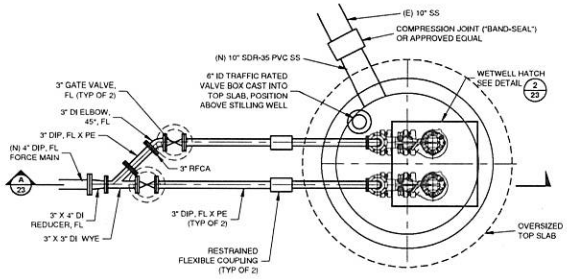

IMPROVEMENT PLAN

SCALE: 1/2" = 1'

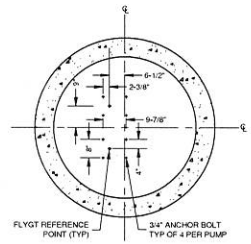

PUMP MOUNTING DETAIL 1/23

SCALE: 1/2" = 1'

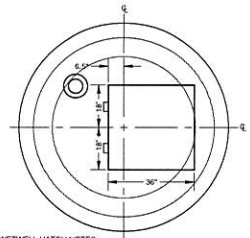

WETWELL HATCH NOTES:
1. ACCESS HATCH DIMENSIONS SHOWN ARE CLEAR OPENINGS.
2. OVERSIZE CONCRETE TOP SLAB AS NECESSARY TO PROVIDE H-20 RATED STRUCTURE AND REQUIRED CLEARANCES
3. ACCESS HATCH SHALL BE EQUIPPED WITH INTEGRAL FALL PROTECTION.
4. WETWELL ACCESS HATCH SHALL BE STREET RATED FOR CONTINUOUS H-20 LOADING.
5. HATCH SHALL BE EAST JORDAN IRON WORKS MODEL 8217 HD, EXTRA HEAVY DUTY HATCH, OR APPROVED EQUAL.
6. HATCH SHALL BE EQUIPPED WITH A SS SPRING ASSIST THAT REDUCES THE LIFTING FORCE TO LESS THAN 50 LBS.
7. HATCH SHALL HAVE BLACK ASPHALTIC COATING

WETWELL HATCH DETAIL 2/23

NO SCALE

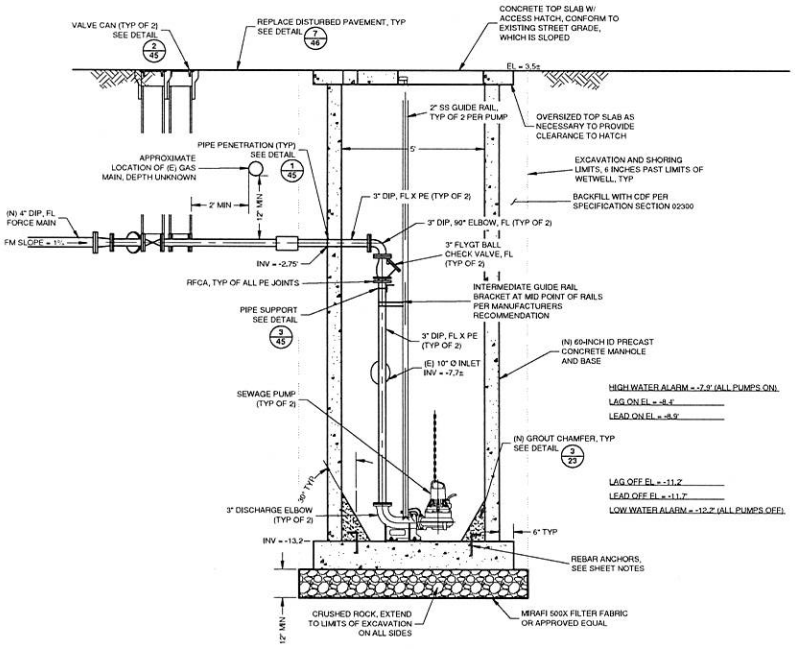

IMPROVEMENT SECTION A/23

SCALE: 1/2" = 1'

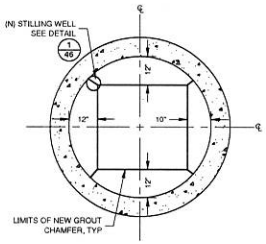

DETAIL NOTES:
1. ALL NEW CHAMFERS SHALL BE ANCHORED WITH REBAR. SEE SHEET NOTES AND SECTION A/23.

LIMITS OF CHAMFER DETAIL 3/23

SCALE: 1/2" = 1'

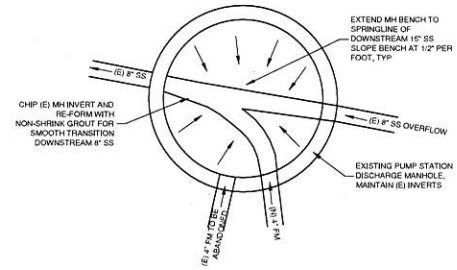

DISCHARGE MH DETAIL 4/23

SCALE: NTS

SHEET NOTES:
1. ALL FORCE MAIN CONNECTIONS SHALL BE RESTRAINED AGAINST THRUST.
2. CONTRACTOR SHALL FIELD VERIFY EXISTING PIPE SIZES, MATERIALS, ELEVATIONS AND DISTANCES PRIOR TO ORDERING AND FABRICATING MATERIALS.
3. CONTRACTOR SHALL VERIFY THE LOCATION AND DEPTH OF THE EXISTING GAS MAIN PRIOR TO CONSTRUCTION AND NOTIFY THE CITY OF ANY POTENTIAL CONFLICTS WITH THE PROPOSED IMPROVEMENTS.
4. EXISTING GAS MAIN AND TREE ADJACENT TO THE NEW WETWELL SHALL BE PROTECTED IN PLACE. CONTRACTOR'S EXCAVATION AND SHORING PLAN SHALL TAKE THIS INTO ACCOUNT. EXCAVATION BY DRILLING/BORING AND USE OF A TEMPORARY STEEL CASING MAY BE REQUIRED.
5. GROUNDWATER IS EXPECTED WITHIN WETWELL EXCAVATION. SEE SPECIFICATIONS FOR EXCAVATION AND DISPOSAL REQUIREMENTS.

POND-OTIS PUMP NOTES:
PUMP SHALL BE AN INDUSTRIAL SEWAGE PUMP, RATED FOR USE IN CLASS 1, DIVISION 1, GROUP D LOCATIONS. PUMP SHALL BE SUPPLIED WITH INTEGRAL MOISTURE AND TEMPERATURE SENSORS. PUMP SHALL BE FLYGT NP 3085 MT WITH THE FOLLOWING CHARACTERISTICS:

VOLTAGE: 208V AC, 60 HZ
PHASES: THREE (3)
HORSEPOWER: 3
IMPELLER DIAMETER: 5.31 INCHES (135 MM)
FLYGT CURVE NO. 61-463-00-4506
RATING POINT: 270 GPM AT 15.6 FEET OF HEAD
DISCHARGE SIZE: 3 INCHES

THE CITY HAS STANDARDIZED THE PUMP MANUFACTURER, NO SUBSTITUTIONS WILL BE ACCEPTED.

NO.	REVISIONS	DATE	APPR
1	ADDENDUM 1	6/19/13	

REGISTERED PROFESSIONAL ENGINEER — GREGORY A. SPICK — No. 58813 — CIVIL — STATE OF CALIFORNIA

Schaaf & Wheeler
CONSULTING CIVIL ENGINEERS
1171 HOMESTEAD RD. STE. 255
SANTA CLARA, CA 95050
(408) 246-4848

CITY OF ALAMEDA
GROUP 1 - SEWERAGE PUMP STATION RENOVATIONS
FOR RELIABILITY AND SAFETY IMPROVEMENTS
POND-OTIS SECTIONS

DATE: 5/21/13
SCALE: AS SHOWN
DESIGN: GMA
DRAWN: GMA
CHECKED: BAS

DWG 9363 CASE 95

SHEET 23 OF 49

D:\JOBS\APWD\7-Phase 1 Pump Stations\Drawings\Phase 1_WORKING\Group 1\FINAL SUBMITTAL 052313\Addendum 1 - Revised Pumps\Group_1_Addendum 1 061913.dwg, 6/19/2013 1:52 PM

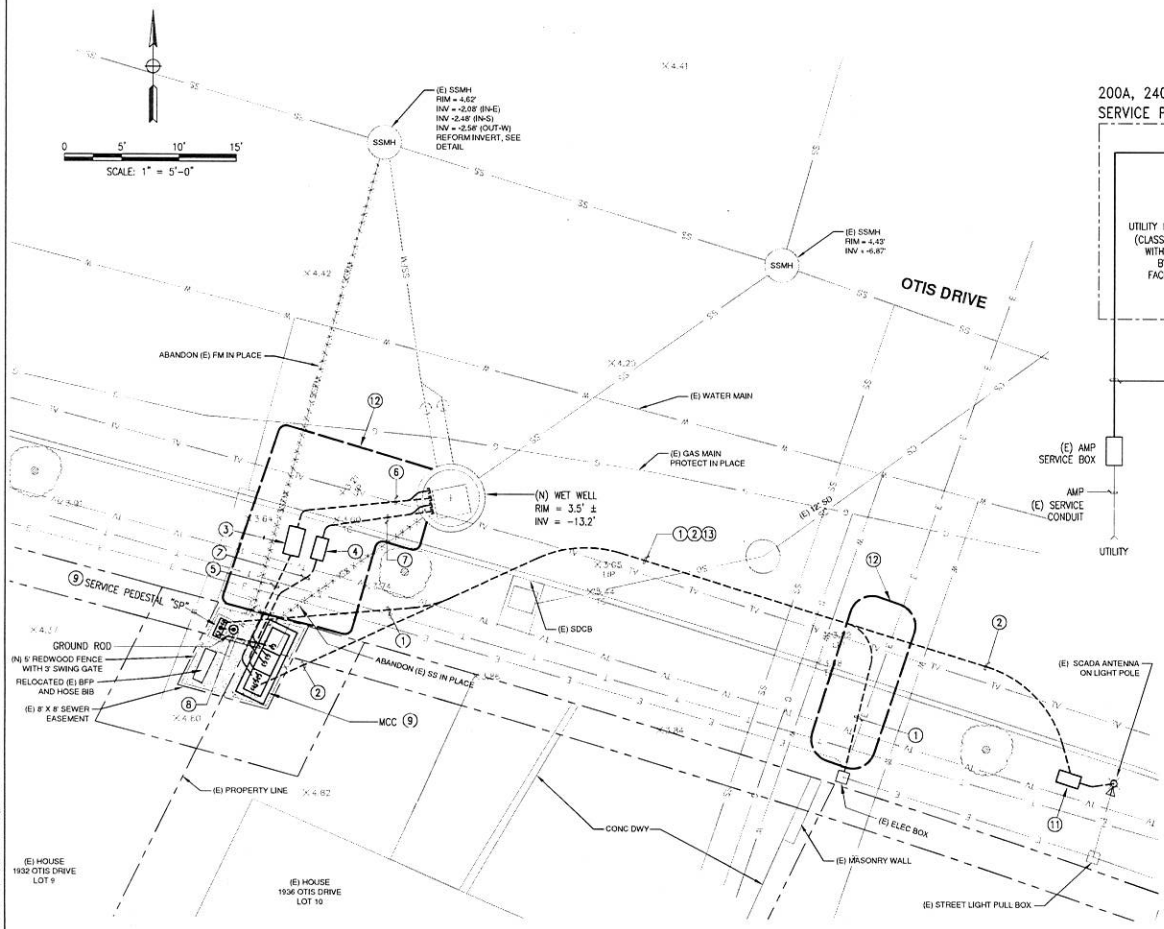

2 POND/OTIS SITE PLAN
SCALE: 1" = 5'-0"

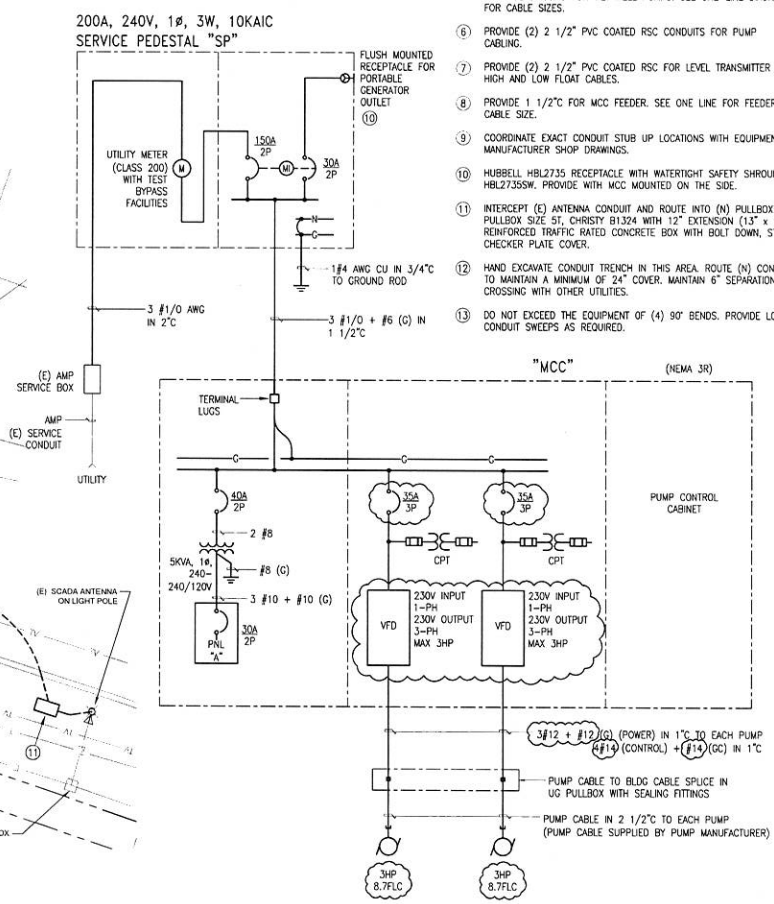

1 POND/OTIS ONE-LINE DIAGRAM
NO SCALE

SHEET NOTES:

1. PROVIDE 2" PVC CONDUIT. INSTALL IN ACCORDANCE WITH ALAMEDA MUNICIPAL POWER (AMP) STANDARD DETAIL 1-L-142.
2. PROVIDE 2"C FOR COAX CABLE CONNECTION FROM (E) ANTENNA TO (R) SCADA SYSTEM.
3. PROVIDE IN GROUND PULLBOX FOR PUMP POWER AND MONITORING CONTROL CIRCUITS, SIZE 6T, CHRISTY B1730 WITH 12" EXTENSION (17" x 30") REINFORCED TRAFFIC RATED CONCRETE BOX WITH BOLT DOWN, STEEL CHECKER PLATED COVER.
4. PROVIDE IN GROUND PULLBOX FOR CONTROLS, SIZE 5T, CHRISTY B1324 WITH 12" EXTENSION (13" x 24") REINFORCED TRAFFIC RATED CONCRETE BOX WITH BOLT DOWN, STEEL CHECKER PLATED COVER.
5. PROVIDE (2) 1" PVC COATED RSC CONDUITS FOR PUMP POWER, (1) 1" PVC COATED RSC FOR MOISTURE AND TEMPERATURE MONITORING CONTROL CIRCUITS FOR WET WELL PUMPS. SEE ONE-LINE DIAGRAM FOR CABLE SIZES.
6. PROVIDE (2) 2 1/2" PVC COATED RSC CONDUITS FOR PUMP CABLING.
7. PROVIDE (2) 2 1/2" PVC COATED RSC FOR LEVEL TRANSMITTER AND HIGH AND LOW FLOAT CABLES.
8. PROVIDE 1 1/2"C FOR MCC FEEDER. SEE ONE LINE FOR FEEDER CABLE SIZE.
9. COORDINATE EXACT CONDUIT STUB UP LOCATIONS WITH EQUIPMENT MANUFACTURER SHOP DRAWINGS.
10. HUBBELL HBL2735 RECEPTACLE WITH WATERTIGHT SAFETY SHROUD HBL2735SW. PROVIDE WITH MCC MOUNTED ON THE SIDE.
11. INTERCEPT (E) ANTENNA CONDUIT AND ROUTE INTO (N) PULLBOX. PULLBOX SIZE 5T, CHRISTY B1324 WITH 12" EXTENSION (13" x 24") REINFORCED TRAFFIC RATED CONCRETE BOX WITH BOLT DOWN, STEEL CHECKER PLATE COVER.
12. HAND EXCAVATE CONDUIT TRENCH IN THIS AREA. ROUTE (N) CONDUIT TO MAINTAIN A MINIMUM OF 24" COVER. MAINTAIN 6" SEPARATION AT CROSSING WITH OTHER UTILITIES.
13. DO NOT EXCEED THE EQUIPMENT OF (4) 90° BENDS. PROVIDE LONG CONDUIT SWEEPS AS REQUIRED.

NO	REVISIONS	DATE	APPR
1	ADDENDUM #1	6/19/13	JH

REGISTERED PROFESSIONAL ENGINEER DAVID C. HERRICK No. 9580 Exp. 9/30/14 ELECTRICAL STATE OF CALIFORNIA

MTH engineers, inc.
3350 scott blvd., bldg. 11
santa clara, ca 95054
(408) 988-9659
FAX (408) 988-9662
PROJECT NO. 11697-01

CITY OF ALAMEDA
GROUP 1 - SEWERAGE PUMP STATION RENOVATIONS FOR RELIABILITY AND SAFETY IMPROVEMENTS
POND-OTIS PUMP STATION
ONE-LINE & SITE PLAN - NEW WORK

DATE	5-21-13
SCALE	AS SHOWN
DESIGN	KW
DRAWN	YM
CHECKED	JH

DWG 9363 CASE 95

E1.1

FILE: M:\11697-01 Alameda Pumps\VPO1-E11.dwg 06/01/11 11:14 by wcdc
XREF: M:\11697-01 Alameda Pumps\VPS-EDP.dwg
M:\11697-01 Alameda Pumps15_Alameda_Phase1_Group1\25_POTE11.dwg 6/19/2013 3:48 PM
SCALE = BORDER =
XREF: M:\11697-01 Alameda Pumps\V-BASE-APS.dwg

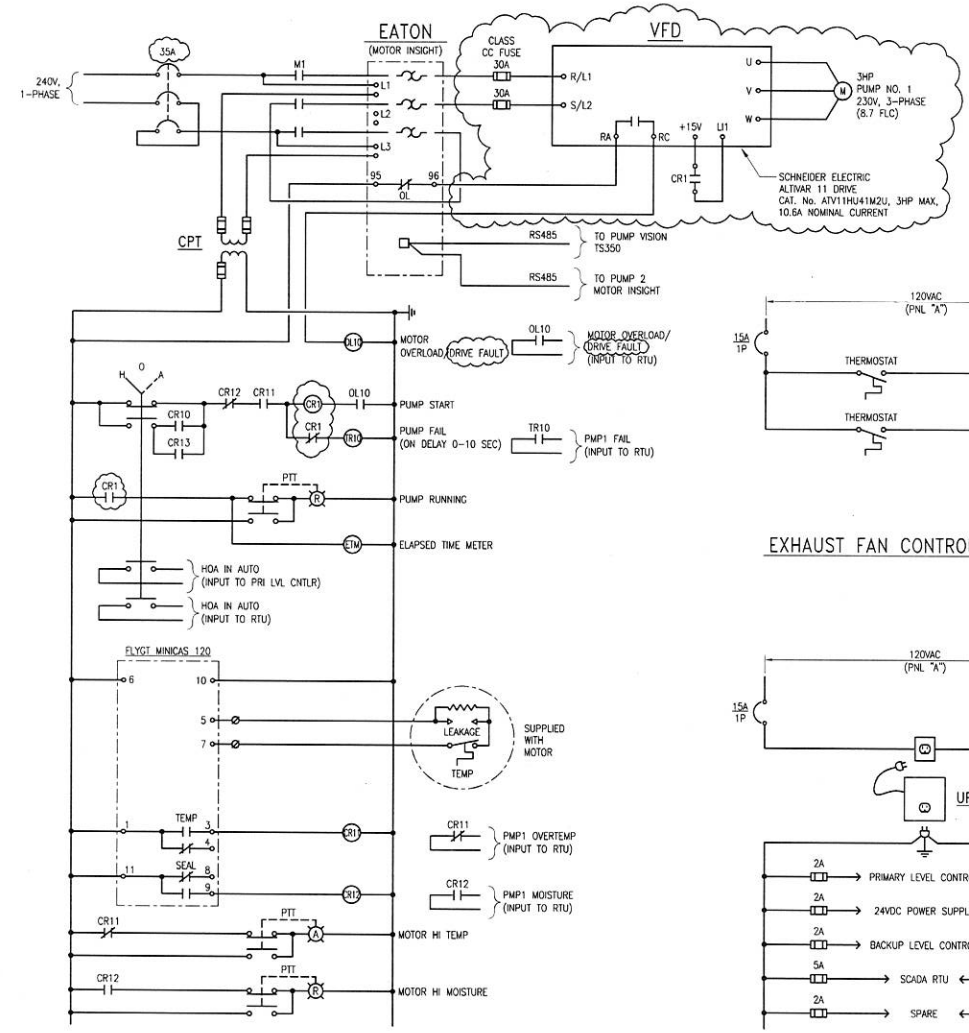

FVNR PUMP No. 1 CONTROL SCHEMATIC DIAGRAM

(SIMILAR FOR PUMP No. 2)

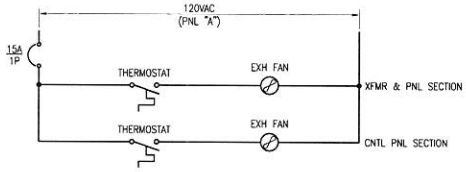

EXHAUST FAN CONTROL SCHEMATIC

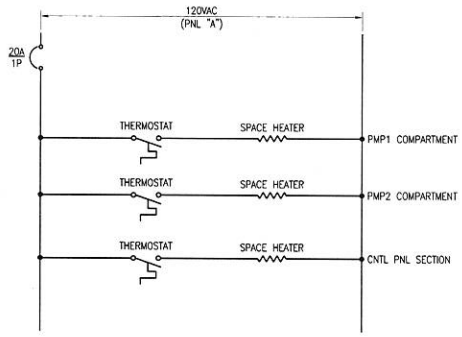

SPACE HEATER CONTROL SCHEMATIC

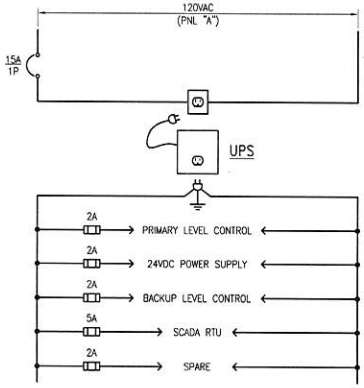

120V UPS SYSTEM SCHEMATIC

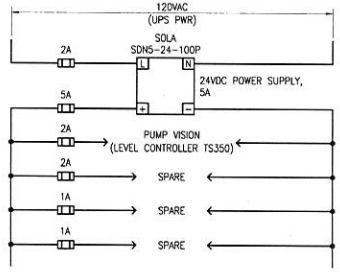

24VDC SYSTEM SCHEMATIC

NO	REVISIONS	DATE	APPR
1	ADDENDUM #1	6/19/13	JH

REGISTERED PROFESSIONAL ENGINEER JULIO C. NERVOLI No. 9580 Exp. 9/30/14 ELECTRICAL STATE OF CALIFORNIA

MTH engineers, inc.
3350 scott blvd., bldg. 11
santa clara, ca 95054
(408) 988-9659
FAX (408) 988-9651
PROJECT NO. 11697-01

CITY OF ALAMEDA
GROUP 1 - SEWERAGE PUMP STATION RENOVATIONS FOR RELIABILITY AND SAFETY IMPROVEMENTS
POND-OTIS PUMP STATION
CONTROL SCHEMATIC DIAGRAM

DATE	5/2/13
SCALE	AS SHOWN
DESIGN	KM
DRAWN	VM
CHECKED	JH

DWG 9363 CASE 95

E2.1

FILE: M:\11697-01 Alameda Pumps\POT-E21.dwg 06/07/11 13:34 by: vuong
XREF: M:\11697-01 Alameda Pumps\11697-01 Alameda Pumps\1_ONE PHASE-PUMPS - SCHEMATIC.dwg
M:\11697-01 Alameda Pumps\15_Alameda_Phase-1_Group-1\06_POT-E21.dwg, 6/19/2013 3:49 PM
SCALE - BORDER -

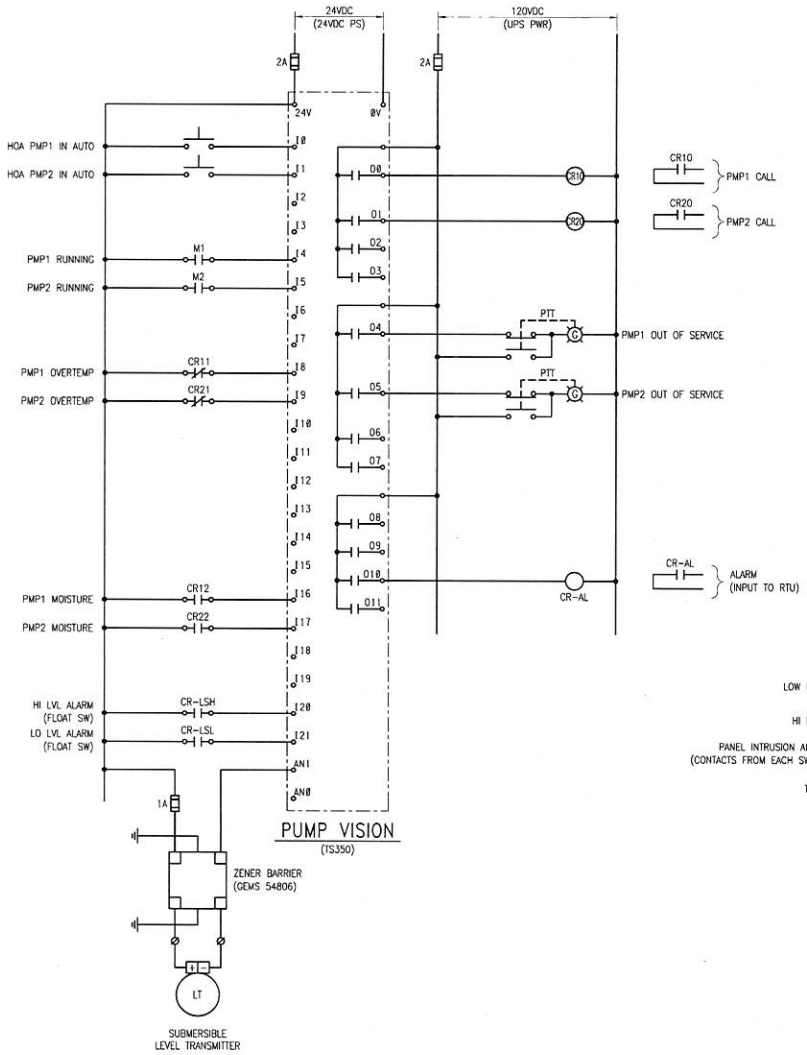

PRIMARY LEVEL CONTROLLER

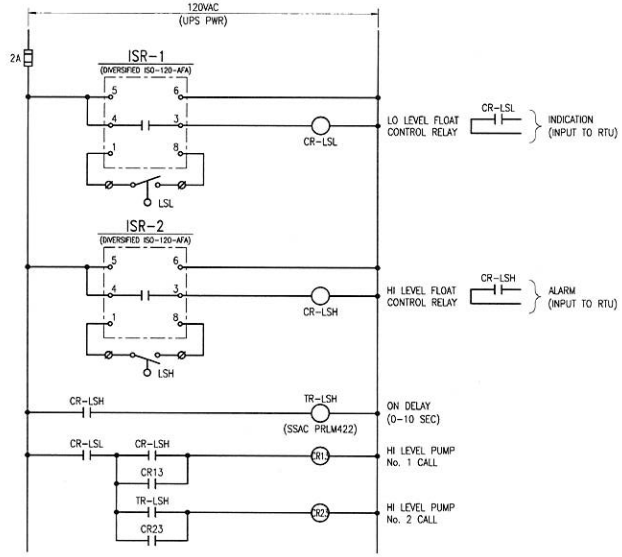

BACKUP LEVEL CONTROL

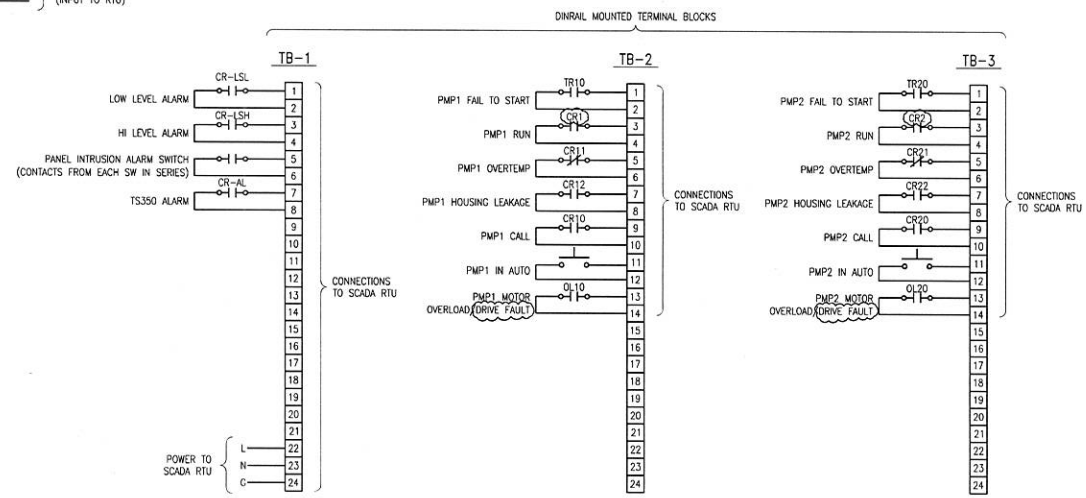

SCADA RTU TERMINATION POINTS

NO	REVISIONS	DATE	APPR
1	ADDENDUM #1	6/19/13	JH

REGISTERED PROFESSIONAL ENGINEER — JULIO C. NERGUIZIAN — No. 9580 — Exp. 9/30/14 — ELECTRICAL — STATE OF CALIFORNIA

MTH engineers, inc.
3350 scott blvd, bldg. 11
santa clara, ca 95054
(408) 986-8649
FAX (408) 986-9627
PROJECT NO. 11697-01

CITY OF ALAMEDA
GROUP 1 - SEWERAGE PUMP STATION RENOVATIONS
FOR RELIABILITY AND SAFETY IMPROVEMENTS
POND-OTIS PUMP STATION
SCHEMATIC DIAGRAM

DATE	5/21/13
SCALE	AS SHOWN
DESIGN	KM
DRAWN	VM
CHECKED	JH

DWG 9363 CASE 95

E2.2

FILE: M:\11697-01 Alameda Pumps\PCT-E21.dwg 05/23/11 16:54 by vicong SCALE = BORDER =
xREF: M:\11697-01 Alameda Pumps\1_DHF Phase-Fu\PS - SCHEMATIC.dwg
xREF: M:\11697-01 Alameda Pumps\VPS-EBR.dwg
M:\11697-01 Alameda Pumps\5_Alameda_Phase1_Group-1\PCT-E22.dwg, 6/19/2013 3:50 PM

#21 GRAND-SHORELINE PUMP STATION

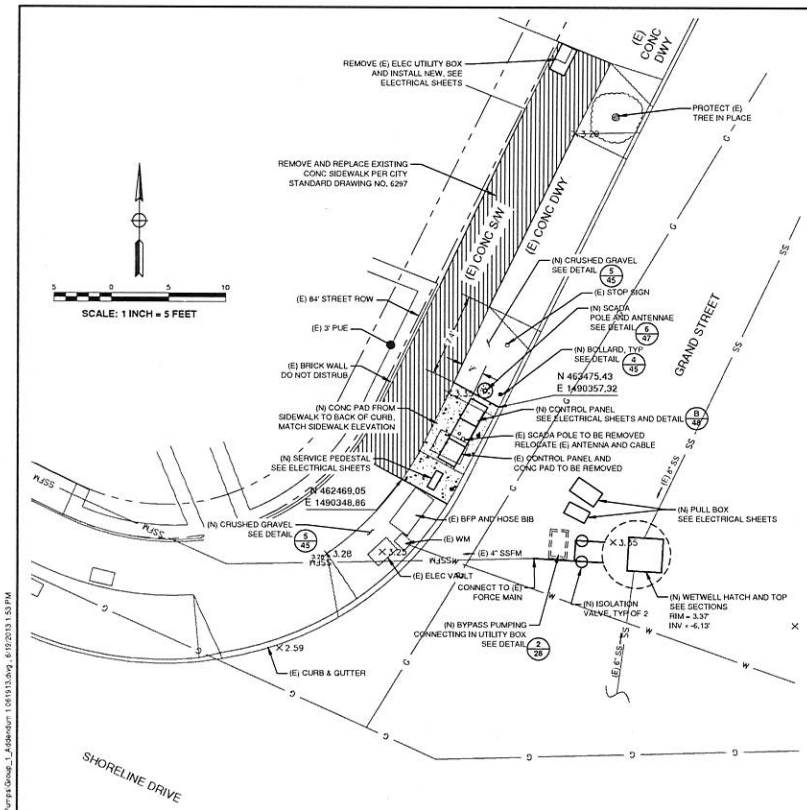

PLAN
SCALE 1" = 5'

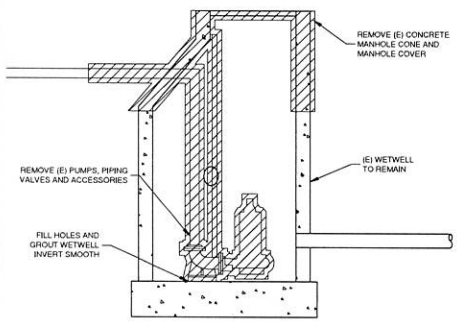

DEMOLITION SECTION B/28
SCALE 1/2" = 1'

(E) MONUMENT DISC 2.86

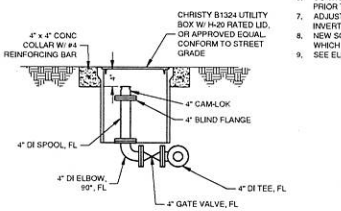

BYPASS PUMP CONNECTION DETAIL 1/28
NO SCALE

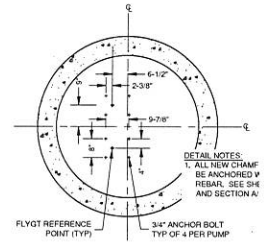

PUMP MOUNTING DETAIL 2/28
NO SCALE

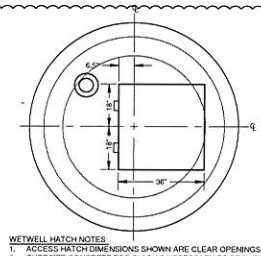

WETWELL HATCH NOTES:
1. ACCESS HATCH DIMENSIONS SHOWN ARE CLEAR OPENINGS.
2. OVERSIZE CONCRETE TOP SLAB AS NECESSARY TO PROVIDE H-20 RATED STRUCTURE AND REQUIRED CLEARANCES
3. ACCESS HATCH SHALL BE EQUIPPED WITH INTEGRAL FALL PROTECTION.
4. WETWELL ACCESS HATCH SHALL BE STREET RATED FOR CONTINUOUS H-20 LOADING.
5. HATCH SHALL BE EAST JORDAN IRON WORKS MODEL 8217 HD, EXTRA HEAVY DUTY HATCH, OR APPROVED EQUAL.
6. HATCH SHALL BE EQUIPPED WITH A SS SPRING ASSIST THAT REDUCES THE LIFTING FORCE TO LESS THAN 50 LBS.
7. HATCH SHALL HAVE BLACK ASPHALTIC COATING

WETWELL HATCH DETAIL 3/28
NO SCALE

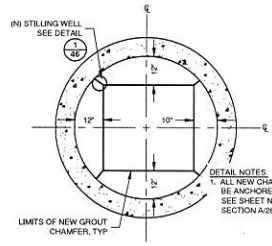

LIMITS OF CHAMFER DETAIL 4/28
NO SCALE

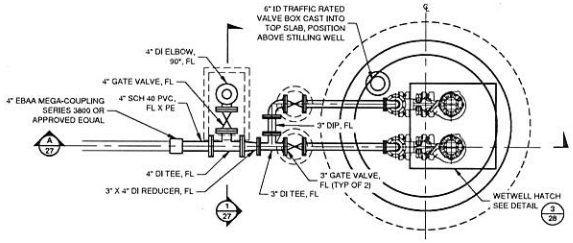

IMPROVEMENT PLAN
SCALE 1/2" = 1'

SHEET NOTES:
1. ALL FORCE MAIN CONNECTIONS SHALL BE RESTRAINED AGAINST THRUST.
2. CONTRACTOR SHALL FIELD VERIFY EXISTING PIPE SIZES, MATERIALS, ELEVATIONS AND DISTANCES PRIOR TO ORDERING AND FABRICATING MATERIALS.
3. ESTIMATED PEAK WET WEATHER FLOW RATE IS 68 GPM, SEE SPECIFICATIONS FOR BYPASS PUMPING REQUIREMENTS.
4. CONTRACTOR SHALL PROVIDE TRAFFIC CONTROL AT ALL TIMES WHEN WORK IS TAKING PLACE IN THE ROADWAY.
5. WHERE DEMOLITION OR REMOVAL OF EQUIPMENT LEAVES VOIDS IN THE CONCRETE STRUCTURE, FILL VOIDS WITH NON-SHRINK GROUT.
6. CONTRACTOR SHALL VERIFY LOCATION OF EXISTING IRRIGATION SYSTEMS PRIOR TO CONSTRUCTION AND NOTIFY THE CITY OF ANY POTENTIAL CONFLICTS.
7. ADJUST PUMP CONTROL LEVELS BASED ON DISTANCE FROM FINAL WETWELL INVERT ELEVATION.
8. NEW SCADA POLE SHALL BE THE SAME HEIGHT AS THE EXISTING SCADA POLE, WHICH IS APPROXIMATELY 12 FEET ABOVE THE EXISTING GROUND.
9. SEE ELECTRICAL SHEETS FOR ADDITIONAL PUMP STATION IMPROVEMENTS.

GRAND-SHORELINE PUMP NOTES:
PUMP SHALL BE AN INDUSTRIAL SEWAGE PUMP, RATED FOR USE IN CLASS 1, DIVISION 1, GROUP D LOCATIONS, PUMP SHALL BE SUPPLIED WITH INTEGRAL MOISTURE AND TEMPERATURE SENSORS, PUMP SHALL BE FLYGT MODEL NP 3085 MT WITH THE FOLLOWING CHARACTERISTICS:

VOLTAGE: 230V, AC, 60 HZ
PHASES: THREE (3)
HORSEPOWER: 3
IMPELLER DIAMETER: 4.69 INCHES (119 MM)
RATING POINT: 135 GPM AT 16 FEET OF HEAD
DISCHARGE SIZE: 3 INCHES

THE CITY HAS STANDARDIZED THE PUMP MANUFACTURER, NO SUBSTITUTIONS WILL BE ACCEPTED.

GRAND-SHORELINE BENCHMARK
EXISTING MONUMENT DISC ON THE SOUTH SIDE OF THE PUMP STATION = 2.86' AS SHOWN ON THE PLAN

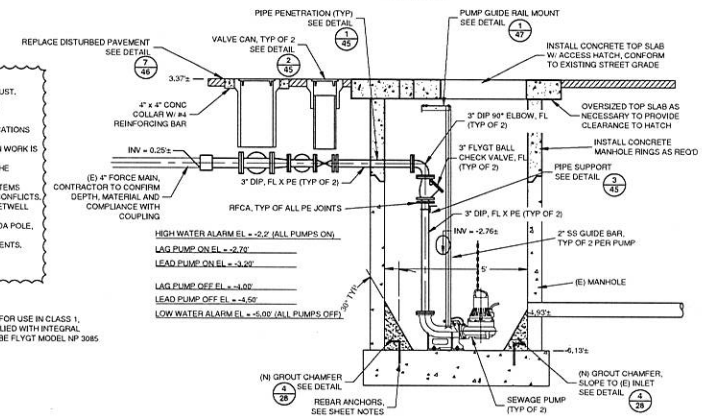

IMPROVEMENT SECTION A/28
SCALE 1/2" = 1'

NO	REVISIONS	DATE	APPR
1	ADDENDUM 1	6/18/13	

REGISTERED PROFESSIONAL ENGINEER ★ MARK A. SPICER ★ No. 58813 ★ CIVIL ★ STATE OF CALIFORNIA

Schaaf & Wheeler
CONSULTING CIVIL ENGINEERS
1171 HOMESTEAD RD. STE. 255
SANTA CLARA, CA 95050
(408) 246-4848

CITY OF ALAMEDA
GROUP 1 - SEWERAGE PUMP STATION RENOVATIONS FOR RELIABILITY AND SAFETY IMPROVEMENTS
GRAND-SHORELINE SITE PLAN

DATE	5/21/13
SCALE	AS SHOWN
DESIGN	GMA
DRAWN	GMA
CHECKED	B.S.

DWG 9363 CASE 95

SHEET 28 OF 49

D:\JOBS\APWD\07-Phase 1 Pump Stations\Drawings\Phase 1_WORKING\Group 1\FINAL SUBMITTAL 052213\Addendum 1 - Revised Pumps\Group_1_Addendum 1 061913.dwg, 6/19/2013 1:53 PM

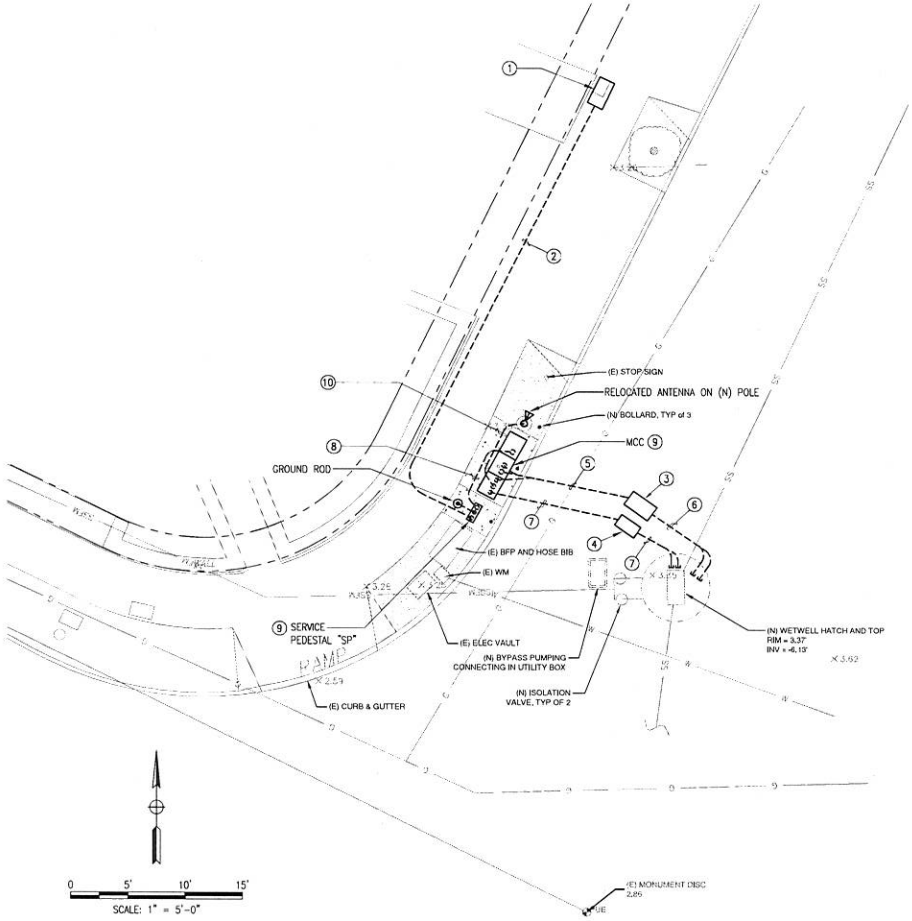

2 GRAND/SHORELINE SITE PLAN

SCALE: 1" = 5'-0"

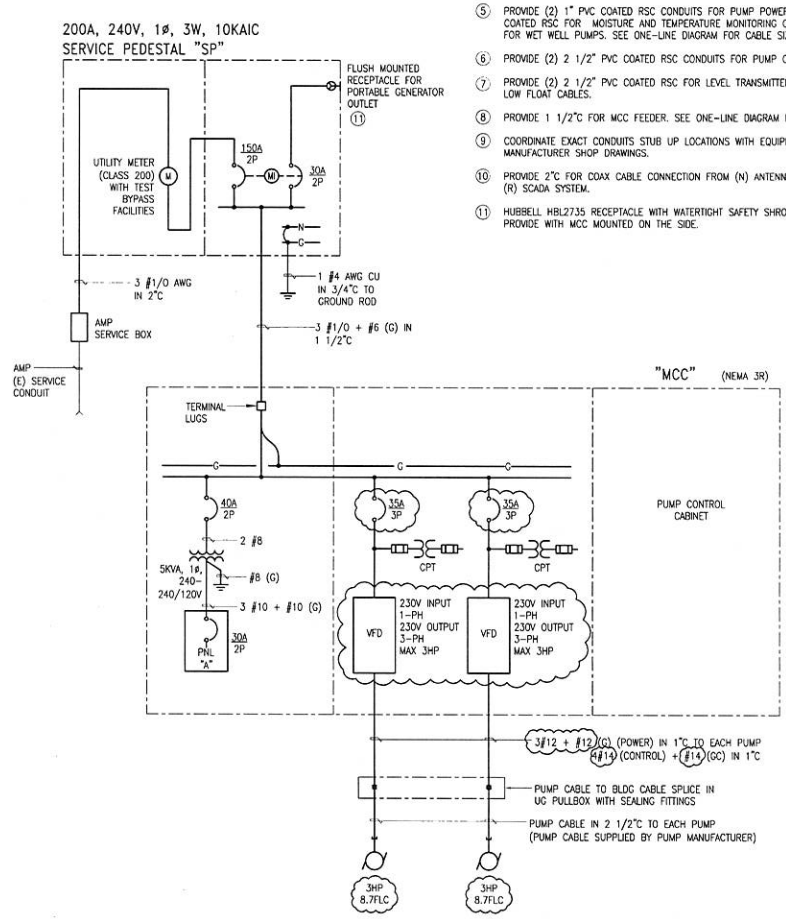

1 GRAND/SHORELINE ONE-LINE DIAGRAM

NO SCALE

SHEET NOTES:

1. REMOVE (E) ALAMEDA MUNICIPAL POWER (AMP) UTILITY BOX AND REPLACE WITH AMP STANDARD 17" x 30" x 26" D UTILITY BOX PER AMP STANDARD DWG. 1-L-447.
2. PROVIDE 2" PVC CONDUIT. INSTALL IN ACCORDANCE WITH AMP STANDARD DETAIL 1-L-412.
3. PROVIDE IN GROUND PULLBOX FOR PUMP POWER AND MONOTORING CONTROL CIRCUITS, SIZE 6T, CHRISTY B1730 WITH 12" EXTENSION (17" x 30") REINFORCED TRAFFIC RATED CONCRETE BOX WITH BOLT DOWN, STEEL CHECKER PLATE COVER.
4. PROVIDE IN GROUND PULLBOX SIZE 5T, CHRISTY B1324 WITH 12" EXTENSION (13" x 24") REINFORCED TRAFFIC RATED CONCRETE BOX WITH BOLT DOWN, STEEL CHECKER PLATE COVER.
5. PROVIDE (2) 1" PVC COATED RSC CONDUITS FOR PUMP POWER, (1) 1" PVC COATED RSC FOR MOISTURE AND TEMPERATURE MONITORING CONTROL CIRCUITS FOR WET WELL PUMPS. SEE ONE-LINE DIAGRAM FOR CABLE SIZES.
6. PROVIDE (2) 2 1/2" PVC COATED RSC CONDUITS FOR PUMP CABLING.
7. PROVIDE (2) 2 1/2" PVC COATED RSC FOR LEVEL TRANSMITTER AND HIGH AND LOW FLOAT CABLES.
8. PROVIDE 1 1/2"C FOR MCC FEEDER. SEE ONE-LINE DIAGRAM FOR CABLE SIZE.
9. COORDINATE EXACT CONDUITS STUB UP LOCATIONS WITH EQUIPMENT MANUFACTURER SHOP DRAWINGS.
10. PROVIDE 2"C FOR COAX CABLE CONNECTION FROM (N) ANTENNA POLE TO (R) SCADA SYSTEM.
11. HUBBELL HBL2735 RECEPTACLE WITH WATERTIGHT SAFETY SHROUD HBL2735SW. PROVIDE WITH MCC MOUNTED ON THE SIDE.

NO	REVISIONS	DATE	APPR
1	ADDENDUM #1	6/19/13	JH

REGISTERED PROFESSIONAL ENGINEER DAVID C. NEWCOMB No. 9580 Exp. 9/30/14 ELECTRICAL STATE OF CALIFORNIA

MTH engineers, inc.
3350 scott blvd., bldg. 11
santa clara, ca 95054
(408) 988-9659
FAX (408) 988-9662

PROJECT NO. 11697-01

CITY OF ALAMEDA
GROUP 1 - SEWERAGE PUMP STATION RENOVATIONS FOR RELIABILITY AND SAFETY IMPROVEMENTS
GRAND-SHORELINE PUMP STATION
ONE LINE & SITE PLAN - NEW WORK

DATE	6/21/13
SCALE	AS SHOWN
DESIGN	KKI
DRAWN	VM
CHECKED	JH

DWG 9363 CASE 95

E1.1

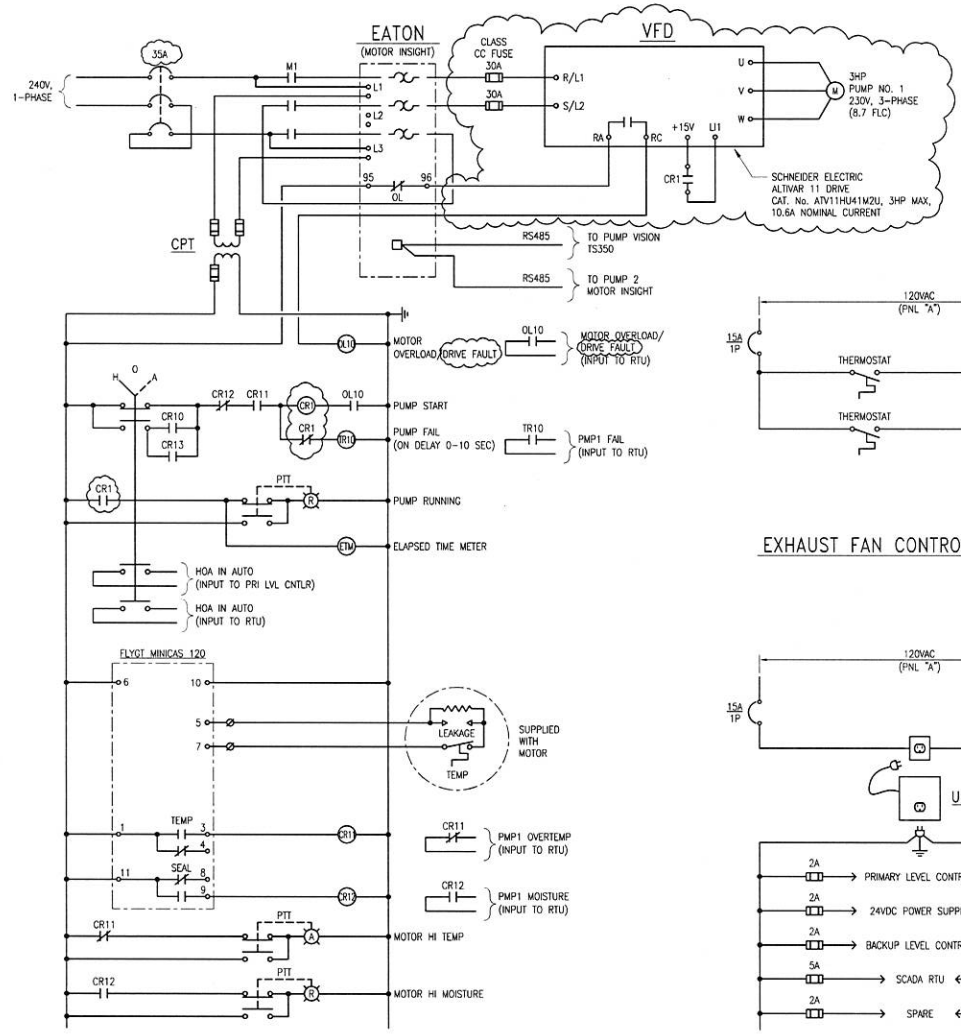

FVNR PUMP No. 1 CONTROL SCHEMATIC DIAGRAM
(SIMILAR FOR PUMP No. 2)

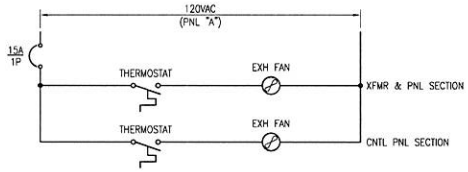

EXHAUST FAN CONTROL SCHEMATIC

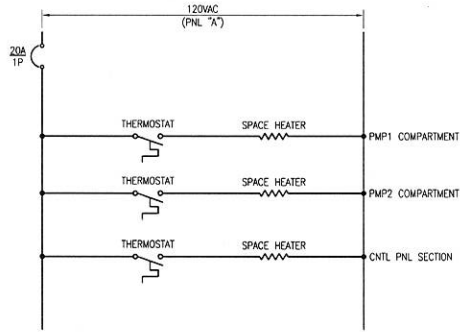

SPACE HEATER CONTROL SCHEMATIC

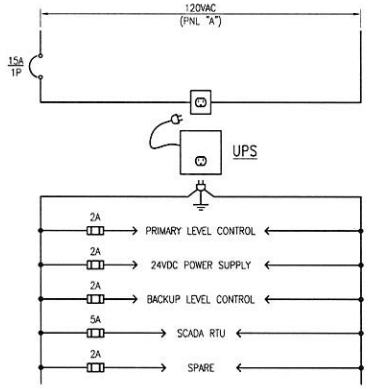

120V UPS SYSTEM SCHEMATIC

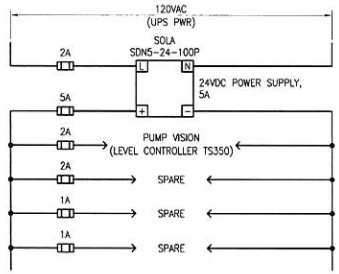

24VDC SYSTEM SCHEMATIC

NO	REVISIONS	DATE	APPR
1	ADDENDUM #1	6/19/13	JH

REGISTERED PROFESSIONAL ENGINEER
JULIO C. NERVOZA
No. 9580
Exp. 9/30/14
ELECTRICAL
STATE OF CALIFORNIA

MTH engineers, inc.
3350 scott blvd, bldg. 11
santa clara, ca 95054
(408) 986-8558
FAX (408) 986-9627
PROJECT NO. 11697-01

CITY OF ALAMEDA
GROUP 1 - SEWERAGE PUMP STATION RENOVATIONS FOR RELIABILITY AND SAFETY IMPROVEMENTS
GRAND-SHORELINE PUMP STATION
CONTROL SCHEMATIC DIAGRAM

DATE	5/21/13
SCALE	AS SHOWN
DESIGN	KM
DRAWN	VW
CHECKED	JH

DWG 9363 CASE 95

E2.1

FILE: M:\11697-01 Nevada Pumps\GSH-E21.dwg 05/31/11 08:51 by vuong
XREF: M:\11697-01 Nevada Pumps\Xrefs\Xrefs\M:\11697-01 Alameda Pumps\11_ONE PHASE PUMPS - SCHEMATIC.dwg
M:\11697-01 Alameda Pumps\15_Alameda_Phase1_Group-1\01_GSH-E21.dwg 6-19-2013 3:51 PM
SCALE = EXPLODER =

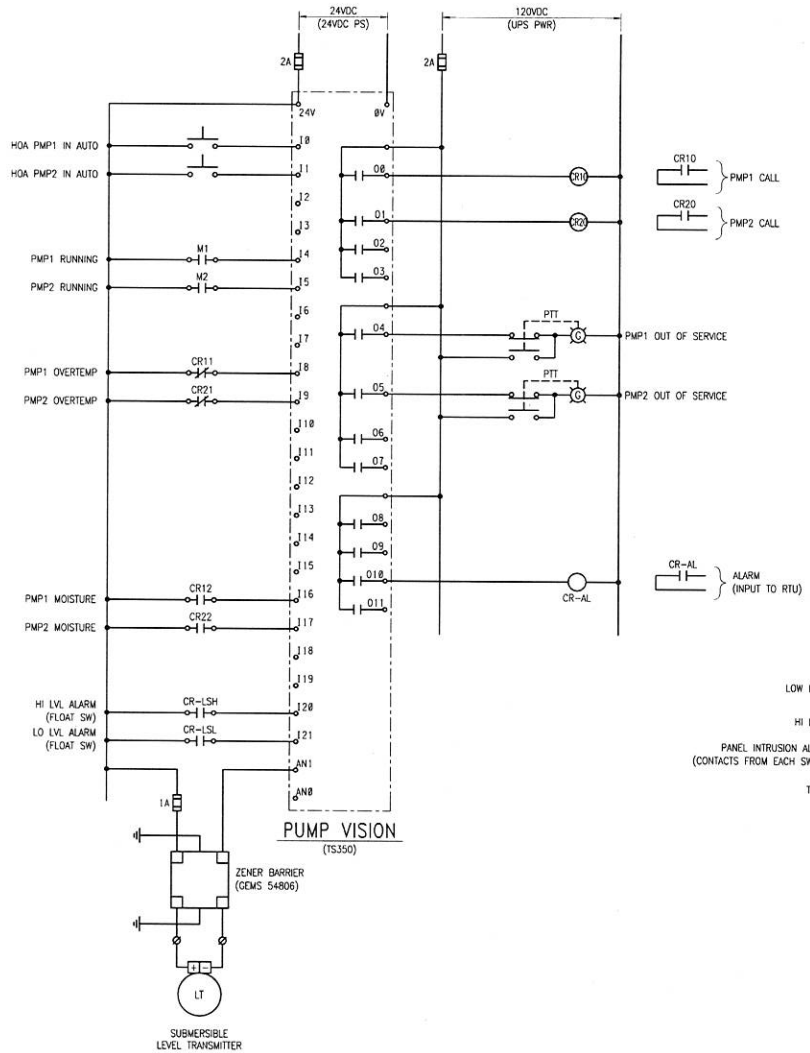

PUMP VISION
(TS350)

PRIMARY LEVEL CONTROLLER

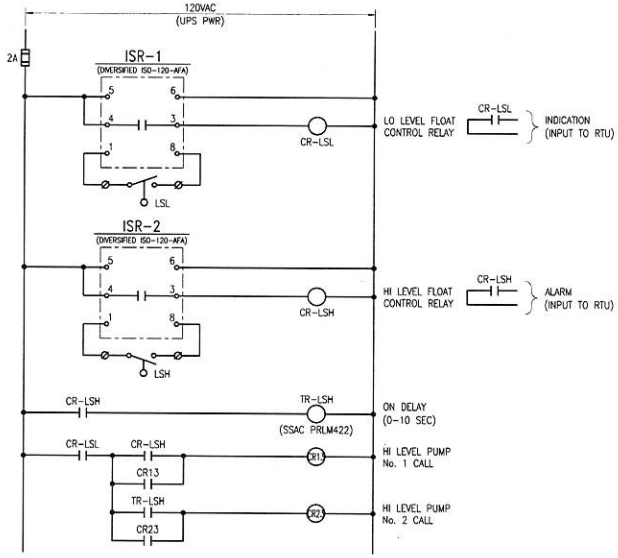

BACKUP LEVEL CONTROL

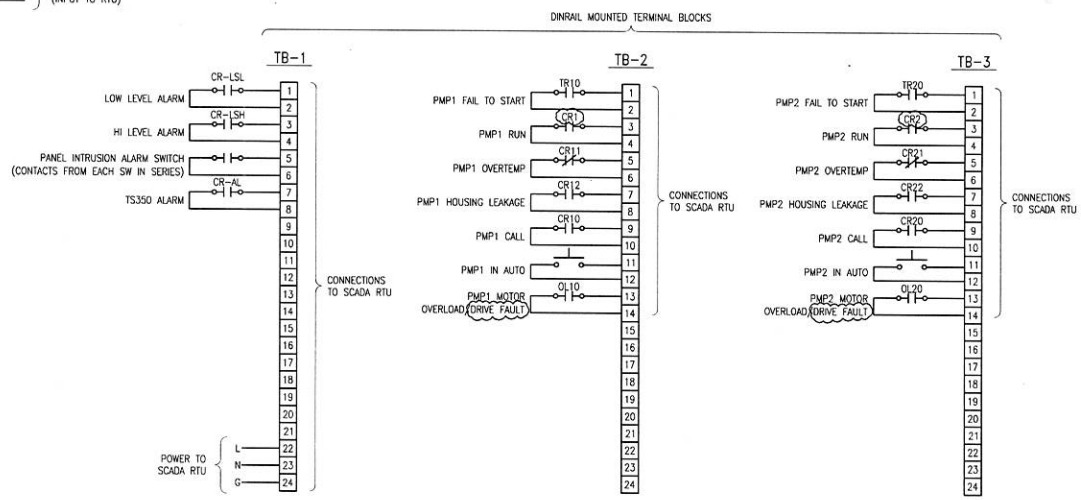

SCADA RTU TERMINATION POINTS

NO	REVISIONS	DATE	APPR
1	ADDENDUM #1	6/19/13	JH

REGISTERED PROFESSIONAL ENGINEER
HUGO C. HERNOCZI
No. 9580
Exp. 9/30/14
ELECTRICAL
STATE OF CALIFORNIA

engineers, inc.
3350 scott blvd, bldg 11
santa clara, ca 95054
(408) 986-8528
FAX (408) 986-9227
PROJECT NO. 11697-01

CITY OF ALAMEDA
GROUP 1 - SEWERAGE PUMP STATION RENOVATIONS
FOR RELIABILITY AND SAFETY IMPROVEMENTS
GRAND-SHORELINE PUMP STATION
SCHEMATIC DIAGRAM

DATE	5/21/13		
SCALE	AS SHOWN	DESIGN	KM
DRAWN	VM	CHECKED	JH

DWG 9363 CASE 95

E2.2

FILE M:\11697-01 Aemcio Pumps \CSH-E22.dwg 05/21/11 09:24 by vuong
XREF M:\11697-01 Aemcio Pumps \CSH-TITLE.dwg
XREF M:\11697-01 Aemcio Pumps _ONE PHASE-PUMPS - SCHEMATIC.dwg
M:\11697\01 Alameda Pumps\15_Alameda_Phase1_Group-1\02_CSH-E22.dwg 6/19/2013 3:52 PM
SCALE -
BORDER -

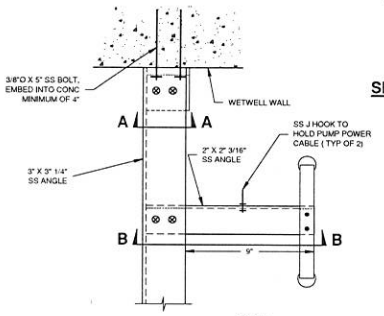

PLAN

NOTES:
1. ALL METAL FABRICATIONS FOR USE IN WETWELL SHALL BE CONSTRUCTED OF TYPE 316 STAINLESS STEEL.
2. LOCATE PUMP RAIL MOUNT 3 INCHES BELOW TOP OF WETWELL AND HATCH

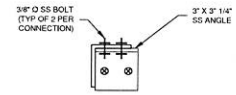

SECTION A-A

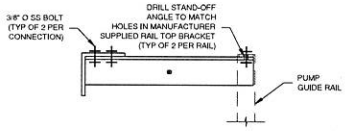

SECTION B-B

FLYGT FP 3068
PUMP GUIDE RAIL MOUNT DETAIL 1/47
NO SCALE

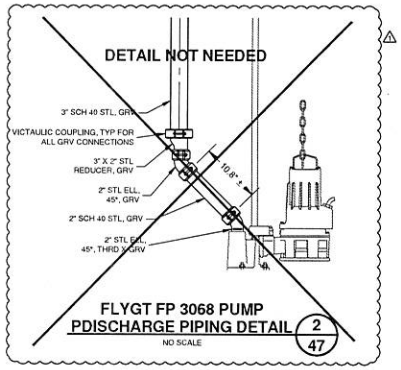

FLYGT FP 3068 PUMP
PDISCHARGE PIPING DETAIL 2/47
NO SCALE

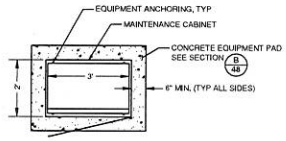

NOTES:
1. MAINTENANCE CABINET SHALL BE 3 FEET TALL.
2. MAINTENANCE CABINET SHALL MEET THE SPECIFICATIONS OF THE CONTROL PANEL AS DESCRIBED IN SPECIFICATION SECTION 16901.
3. ANCHORAGE OF THE CABINET SHALL BE DESIGNED BY THE MANUFACTURER. MANUFACTURER SHALL SUBMIT DRAWINGS AND CALCULATIONS FOR THE EQUIPMENT ANCHORAGE FOR REVIEW AND APPROVAL BY THE ENGINEER PRIOR TO INSTALLATION OF THE EQUIPMENT. SEE PROJECT SPECIFICATIONS FOR SEISMIC DESIGN CRITERIA.

MAINTENANCE CABINET DETAIL 3/47
NO SCALE

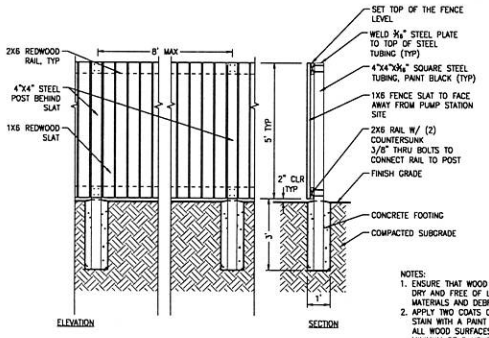

NOTES:
1. ENSURE THAT WOOD IS CLEAN, DRY AND FREE OF LOOSE MATERIALS AND DEBRIS
2. APPLY TWO COATS OF CLEAR STAIN WITH A PAINT BRUSH TO ALL WOOD SURFACES. WAIT A MINIMUM OF 8 HOURS BEFORE APPLYING SECOND COAT.

REDWOOD FENCE DETAIL 4/47
NO SCALE

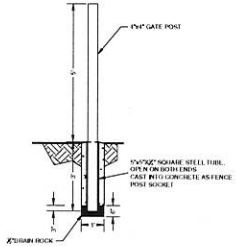

REMOVABLE FENCE POST BASE (WHERE NOTED ON PLANS)

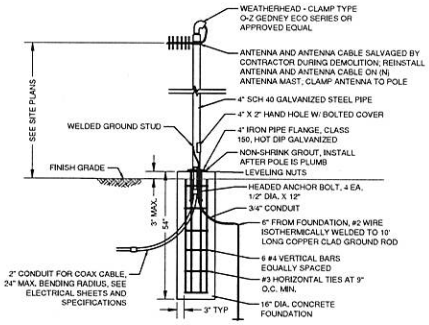

SCADA POLE DETAIL 6/47
NO SCALE

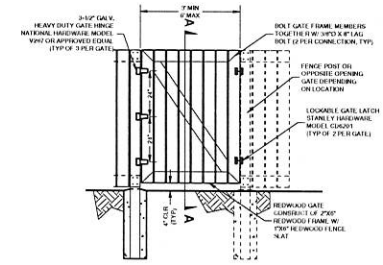

REDWOOD GATE DETAIL 5/47
NO SCALE

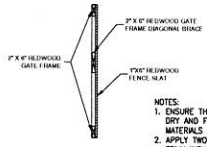

SECTION A-A

NOTES:
1. ENSURE THAT WOOD IS CLEAN, DRY AND FREE OF LOOSE MATERIALS AND DEBRIS
2. APPLY TWO COATS OF CLEAR STAIN WITH A PAINT BRUSH TO ALL WOOD SURFACES. WAIT A MINIMUM OF 8 HOURS BEFORE APPLYING SECOND COAT.

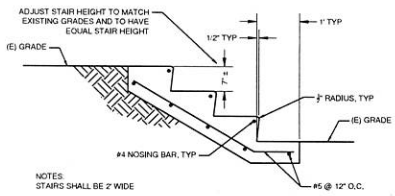

NOTES:
STAIRS SHALL BE 2' WIDE

CONCRETE STAIRS DETAIL 7/47
NO SCALE

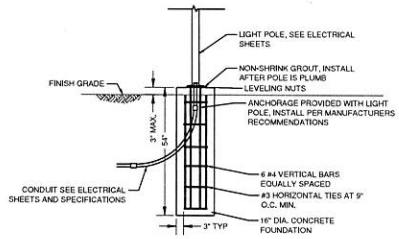

LIGHT POLE FOUNDATION DETAIL 8/47
NO SCALE

NO	REVISIONS	DATE	APPR
1	ADDENDUM 1	6/19/13	

REGISTERED PROFESSIONAL ENGINEER JOHN T. SHUCK No. 38815 CIVIL STATE OF CALIFORNIA

Schaaf & Wheeler
CONSULTING CIVIL ENGINEERS
1171 HOMESTEAD RD, STE. 255
SANTA CLARA, CA 95050
(408) 246-4848

CITY OF ALAMEDA
GROUP 1 - SEWERAGE PUMP STATION RENOVATIONS
FOR RELIABILITY AND SAFETY IMPROVEMENTS

CIVIL DETAILS

DATE	5/21/13
SCALE	AS SHOWN
DESIGN	GMA
DRAWN	GMA
CHECKED	BLS

DWG 9363 CASE 95

SHEET 47 OF 49

D:\JOBS\APN07-07-Phase 1 Pump Stations Drawings\Phase 1_WORKING Group 1\FINAL SUBMITTAL 052213 Addendum 1 - Revised Pumps Group_1_Addendum 1 061913.dwg , 6/19/2013 1:56 PM