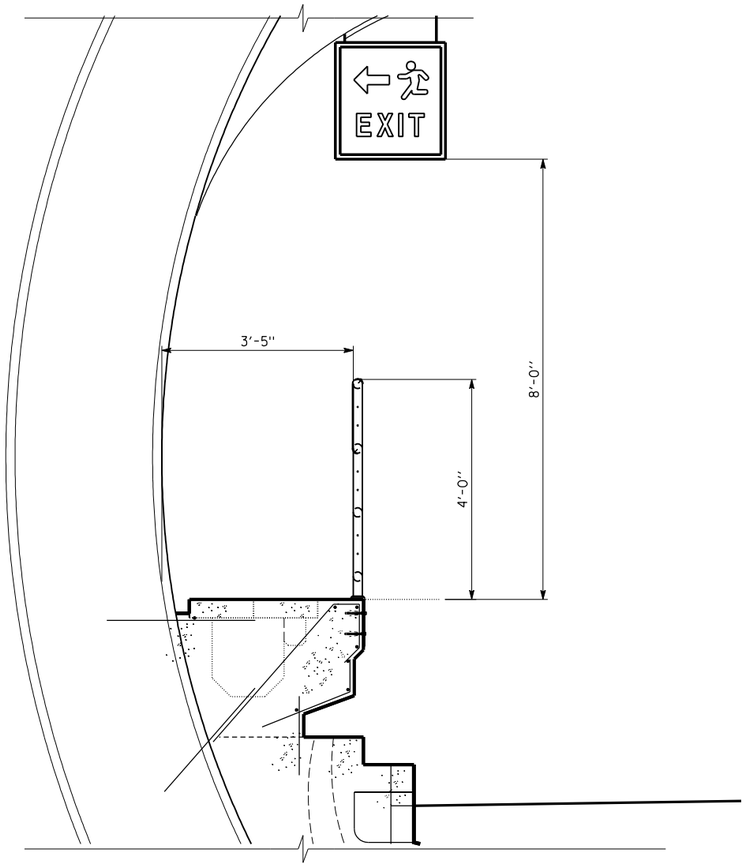

ELEVATION WALL EXIT SIGN

SCALE: 3/4" = 1'-0"

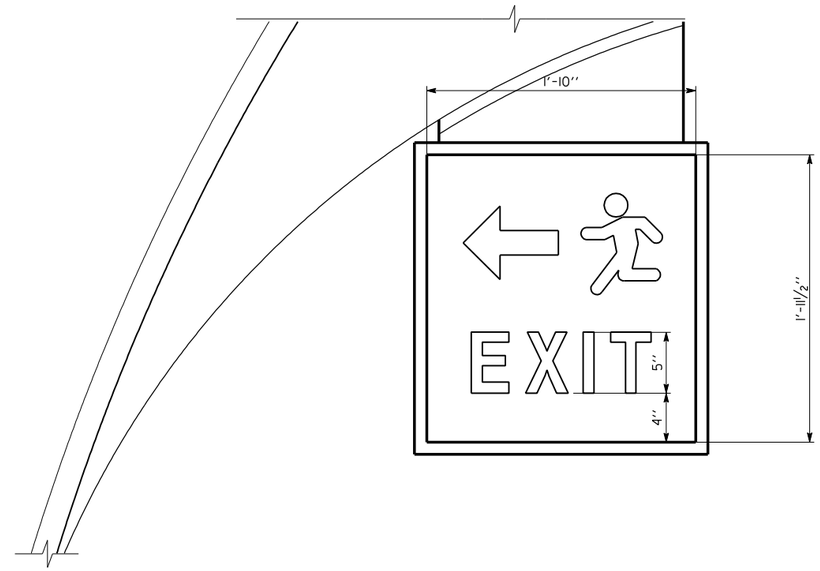

EXIT SIGN

SCALE: 2" = 1'-0"

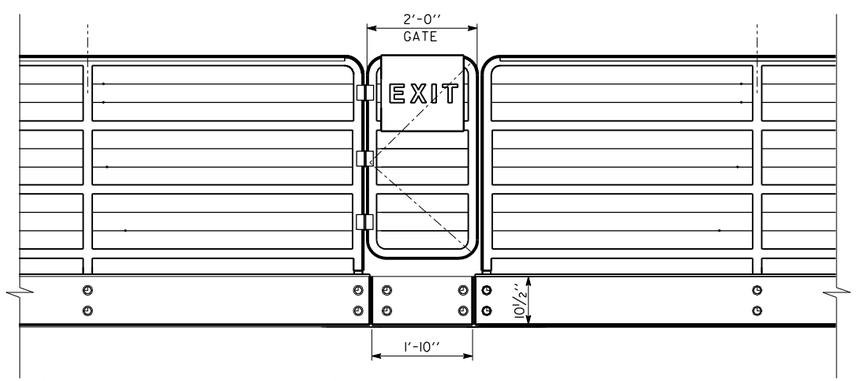

GUARD RAIL AND GATE ELEVATION

SCALE: 3/4" = 1'-0"

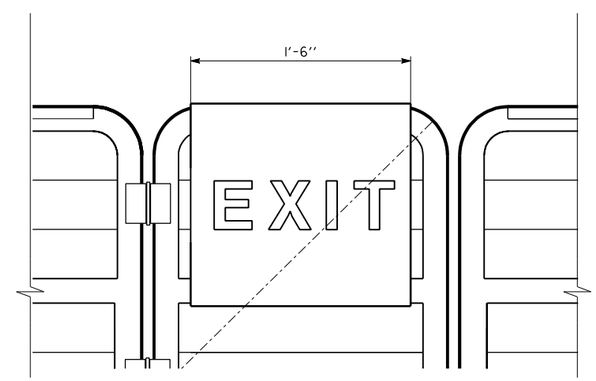

GATE SIGNAGE

SCALE: 3/4" = 1'-0"

SIGNAGE

POSEY/WEBSTER TUBE

TRANSPORTATION ARCHITECTURE BRANCH
STATE OF CALIFORNIA