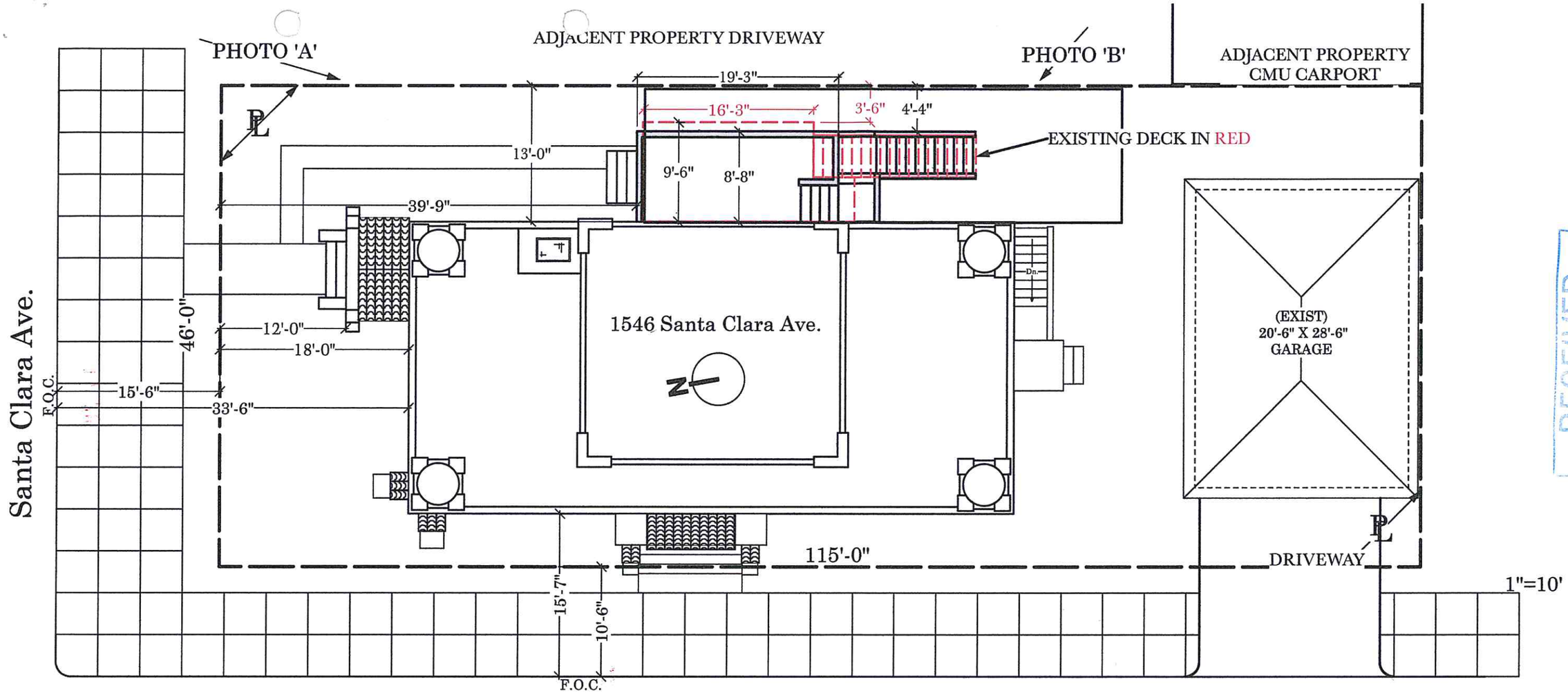

RECEIVED
JUL 11 2013
PERMIT CENTER
ALAMEDA, CA 94501

PHOTO 'A'

PHOTO 'B'

INSPIRATION ARCH
(FROM FRONT PORCH)

PROJECT DESCRIPTION

- replace deteriorated 2 story side deck & stairs with an architecturally compatible covered porch, stairs & kitchen egress/terrace.
- replace 1st floor bedroom 3'-0" x 4'-6" egress window assembly with 3'-0" x 6'-8" egress door.
- replace 1st floor bedroom 3'-0" x 4'-6" egress window sashes with tempered units.

SHEET INDEX

A1- SITE PLAN
A2- Existing 1st Floor Plan
A3- 1st Floor Porch Area
A4- Existing 2nd Floor Plan
A5- 2nd Floor Porch Area
A6-A8- Ext. Elevations

remodel of the:
the CASBAH
1546 Santa Clara Ave.
Alameda, Ca

project design & general contractor:
Mc Neil Construction Co.
1540 Santa Clara Ave., Alameda, Ca.
Lic. #487730 phone/fax:510.521.2050

SHEET A-1
Drawn by:
Date: 7/10/13

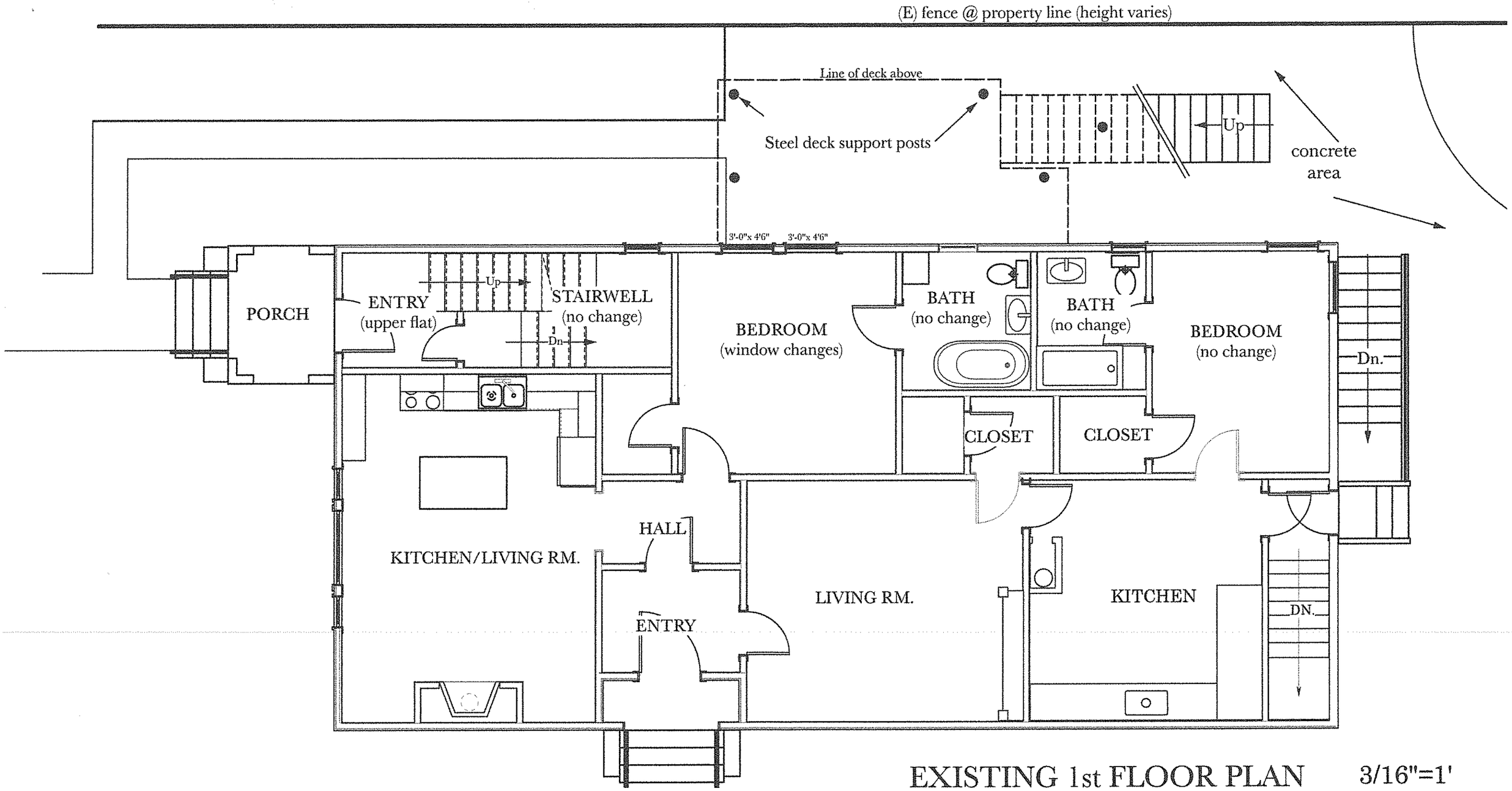

EXISTING 1st FLOOR PLAN 3/16"=1'

remodel of the:	project design & general contractor:	SHEET A-2
the CASBAH 1546 Santa Clara Ave. Alameda, Ca	Mc Neil Construction Co. 1540 Santa Clara Ave., Alameda, Ca. Lic. #487730 phone/fax:510.521.2050	Drawn by: Date: 7/10/13

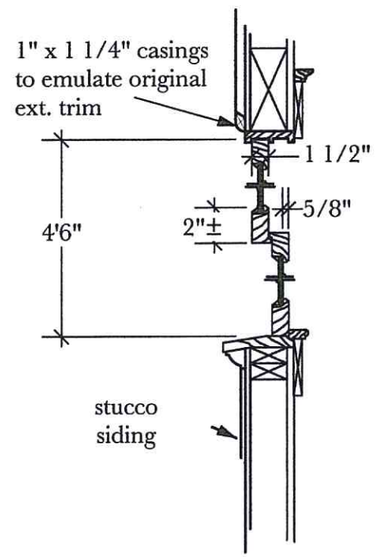

MARVIN WINDOW UNIT (TYP.)

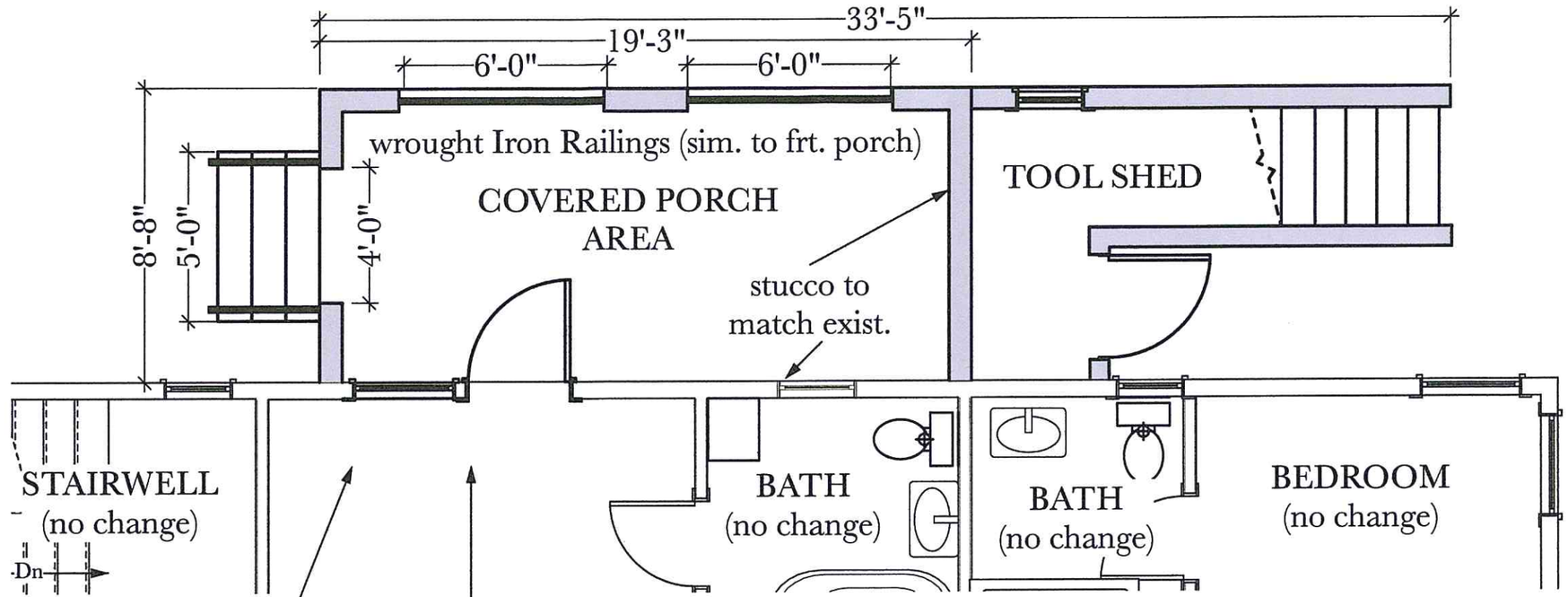

DOOR & WINDOW NOTES:

- WINDOW SHALL BE MARVIN TILT-PAC DOUBLE HUNG TEMPERED INSERT UNITS, GREEN CLAD TO MATCH EXISTING IN ADJACENT BEDROOMS.

- DOOR SHALL BE MARVIN DUAL GLAZED SINGLE LITE GREEN CLAD TO MATCH 2ND STORY KITCHEN DOOR .

- TOOL SHED WINDOW SHALL BE 8X8 GLASS BLOCK TO MATCH EXISTING AT BASEMENT AND 3RD FLOOR BATH. COPPER FLASHED/NO EXT. TRIM

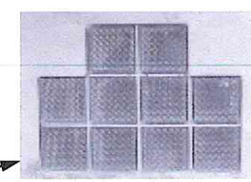

TOOL SHED DOOR SHALL BE USED WOOD PANEL PAINTED TO MATCH.

- ALL NEW OR REPLACED TRIM SHALL MATCH EXISTING, PAINTED MATCHING GREEN.

1st FLOOR PROPOSED PORCH & STAIRS

1/4"=1'

remodel of the:	project design & general contractor:	SHEET A-3
the CASBAH 1546 Santa Clara Ave. Alameda, Ca	Mc Neil Construction Co. 1540 Santa Clara Ave., Alameda, Ca. Lic. #487730 phone/fax:510.521.2050	Drawn by: Date: 7/10/13

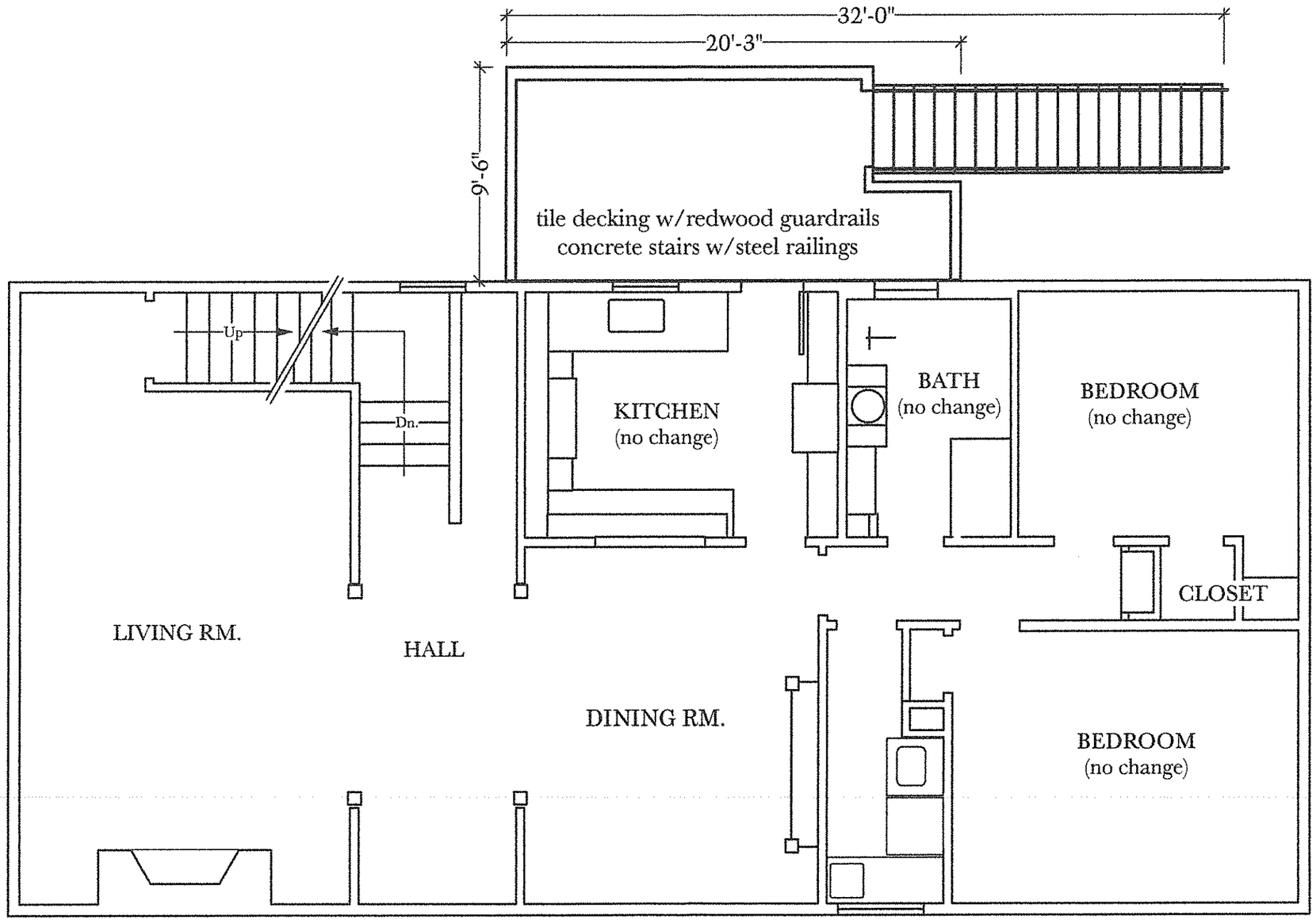

EXISTING 2nd FLOOR PLAN 3/16"=1'

remodel of the:	project design & general contractor:	SHEET A-4
the CASBAH 1546 Santa Clara Ave. Alameda, Ca	Mc Neil Construction Co. 1540 Santa Clara Ave., Alameda, Ca. Lic. #487730 phone/fax:510.521.2050	Drawn by: Date: 7/10/13

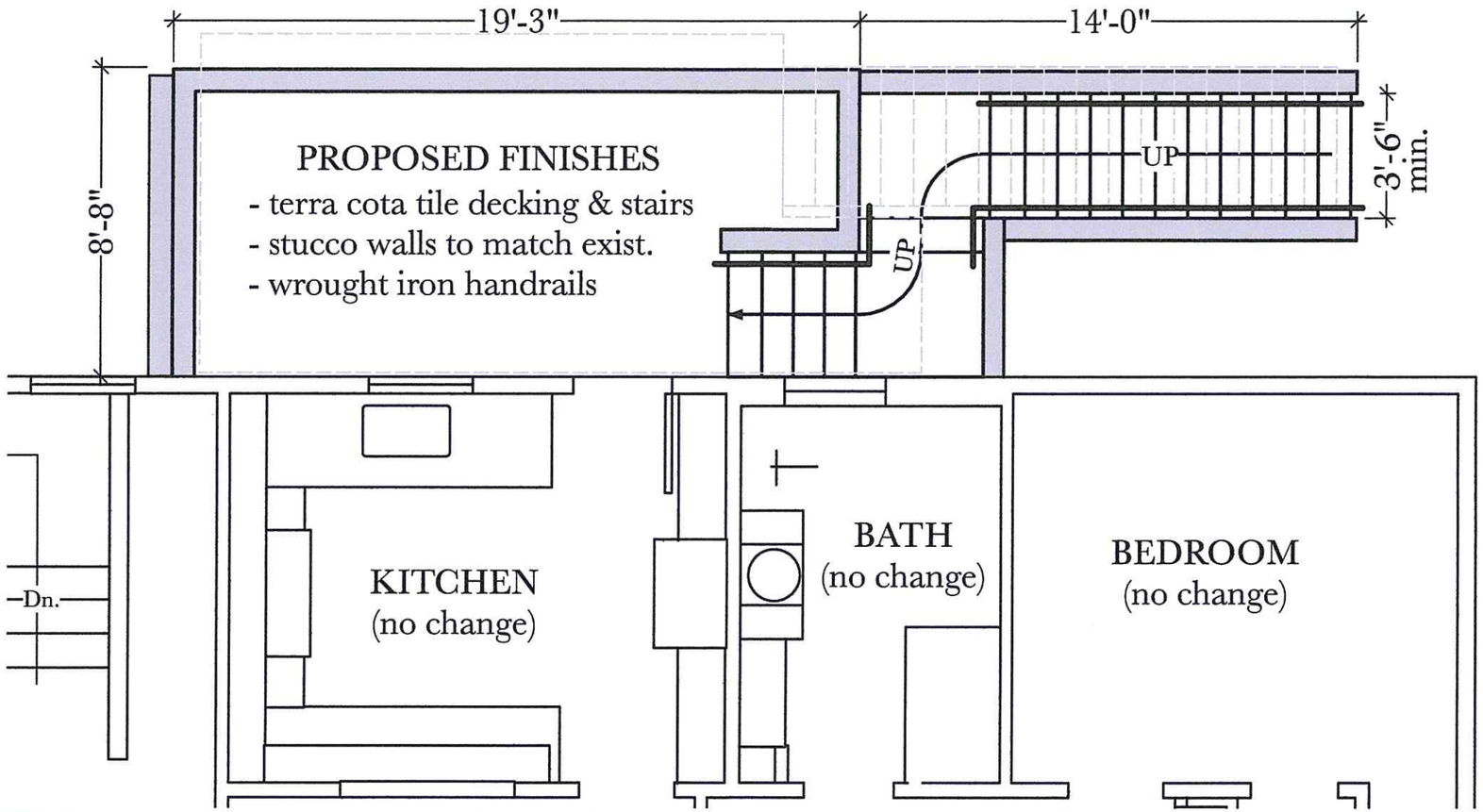

2nd FLOOR PROPOSED PORCH & STAIRS

1/4"=1'

remodel of the:	project design & general contractor:	SHEET A-5
the CASBAH 1546 Santa Clara Ave. Alameda, Ca	Mc Neil Construction Co. 1540 Santa Clara Ave., Alameda, Ca. Lic. #487730 phone/fax:510.521.2050	Drawn by: Date: 7/1013

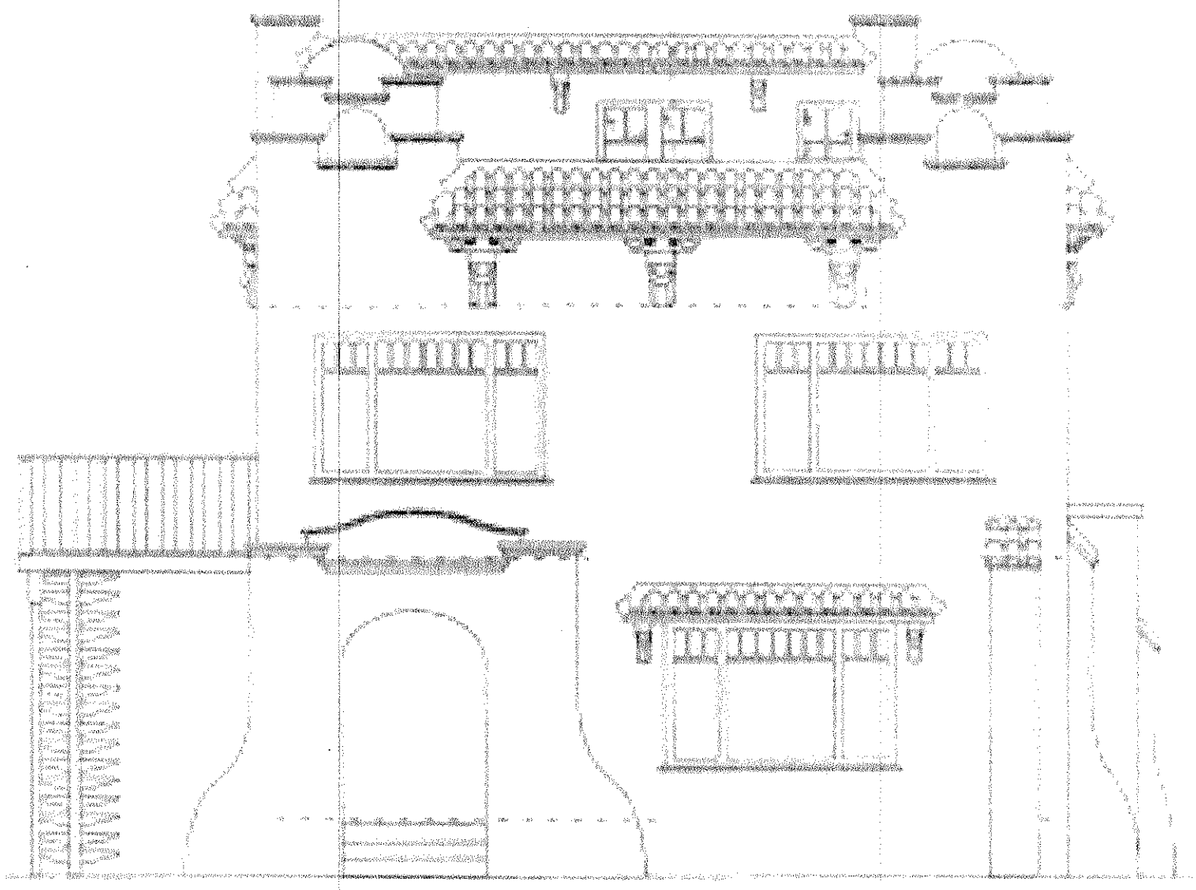

EXISTING NORTH (FRONT) ELEVATION

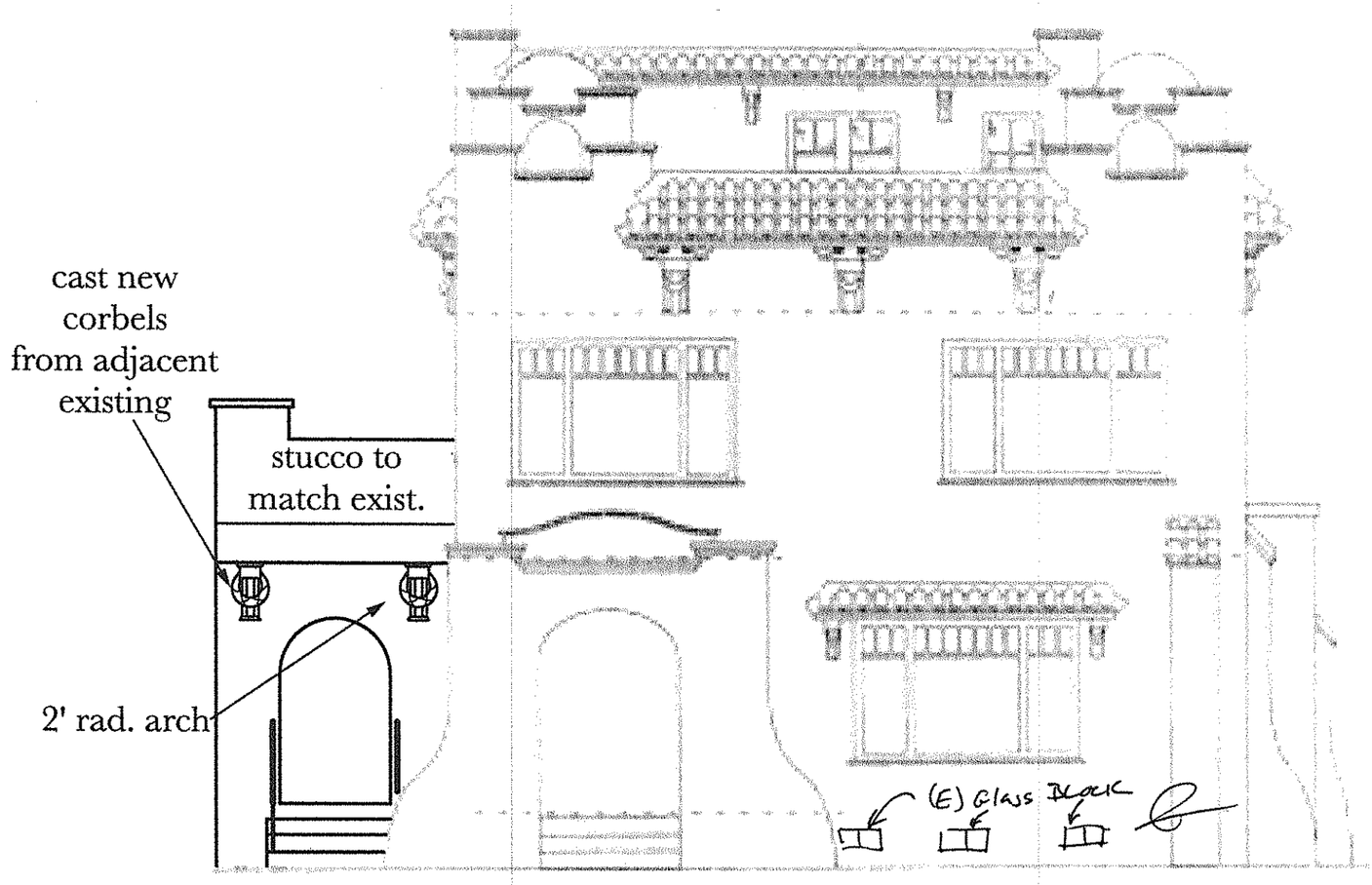

PROPOSED NORTH (FRONT) ELEVATION

3/16"=1"

remodel of the:	project design & general contractor:	SHEET A-6
the CASBAH 1546 Santa Clara Ave. Alameda, Ca	Mc Neil Construction Co. 1540 Santa Clara Ave., Alameda, Ca. Lic. #487730 phone/fax:510.521.2050	Drawn by: Date: 7/10/13

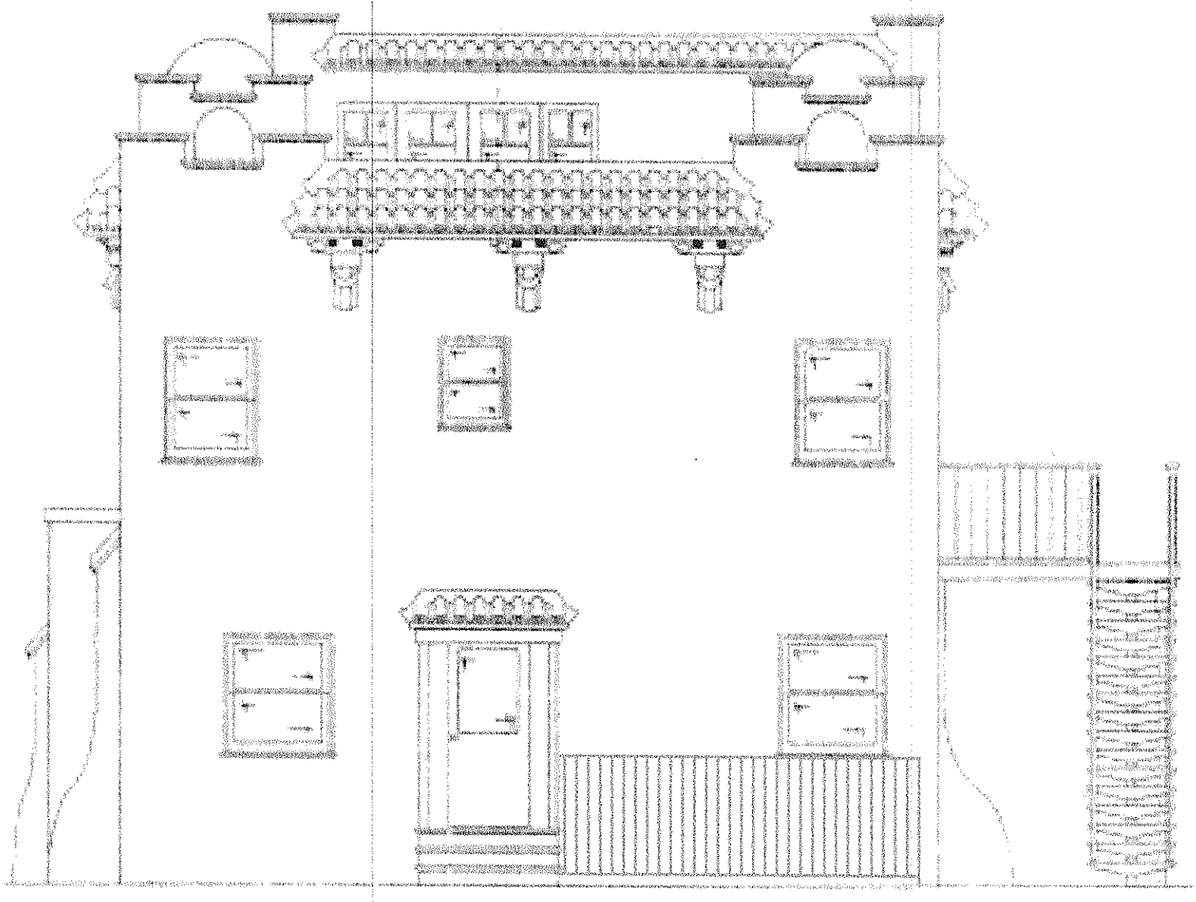

EXISTING SOUTH (REAR) ELEVATION

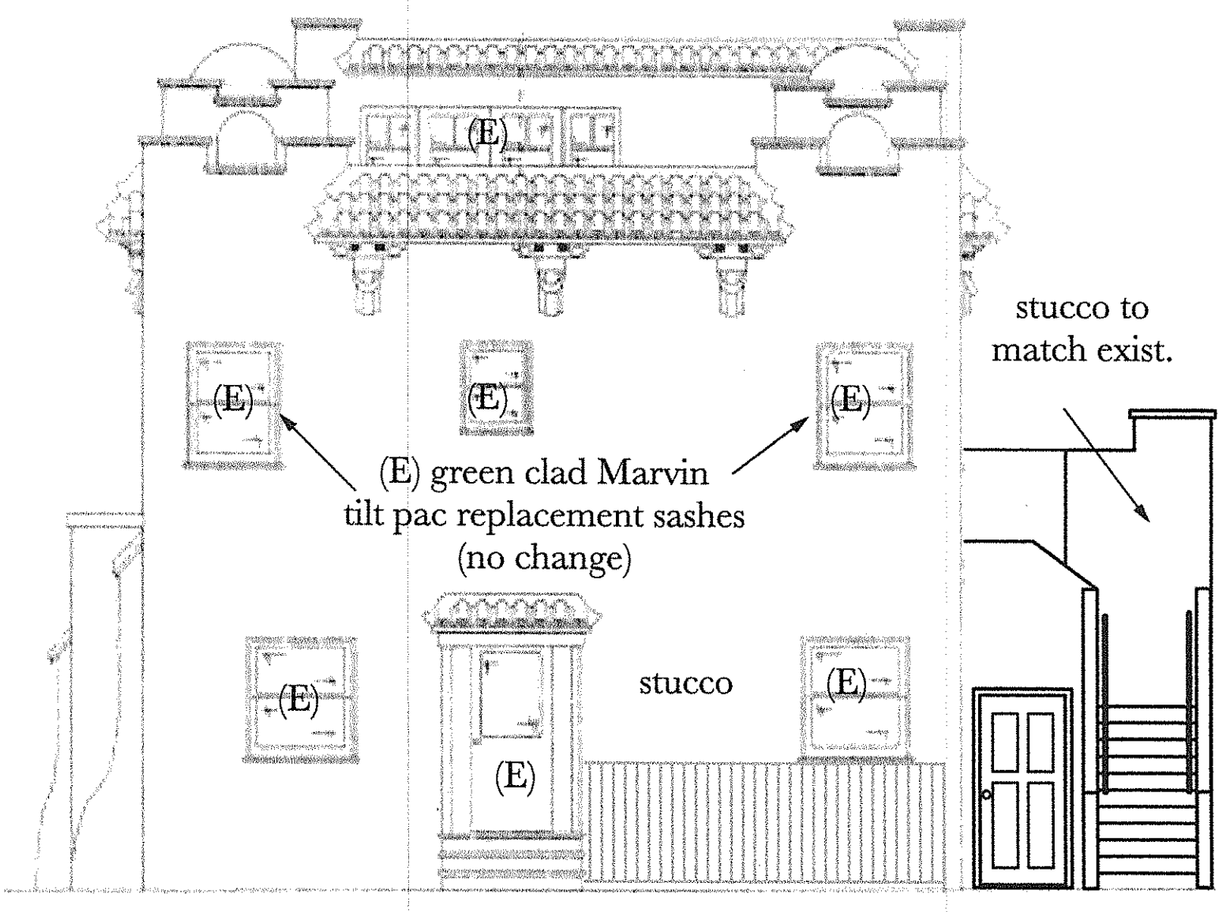

PROPOSED SOUTH (REAR) ELEVATION

3/16"=1"

remodel of the:	project design & general contractor:	SHEET A-7
the CASBAH 1546 Santa Clara Ave. Alameda, Ca	Mc Neil Construction Co. 1540 Santa Clara Ave., Alameda, Ca. Lic. #487730 phone/fax:510.521.2050	Drawn by: Date: 7/10/13

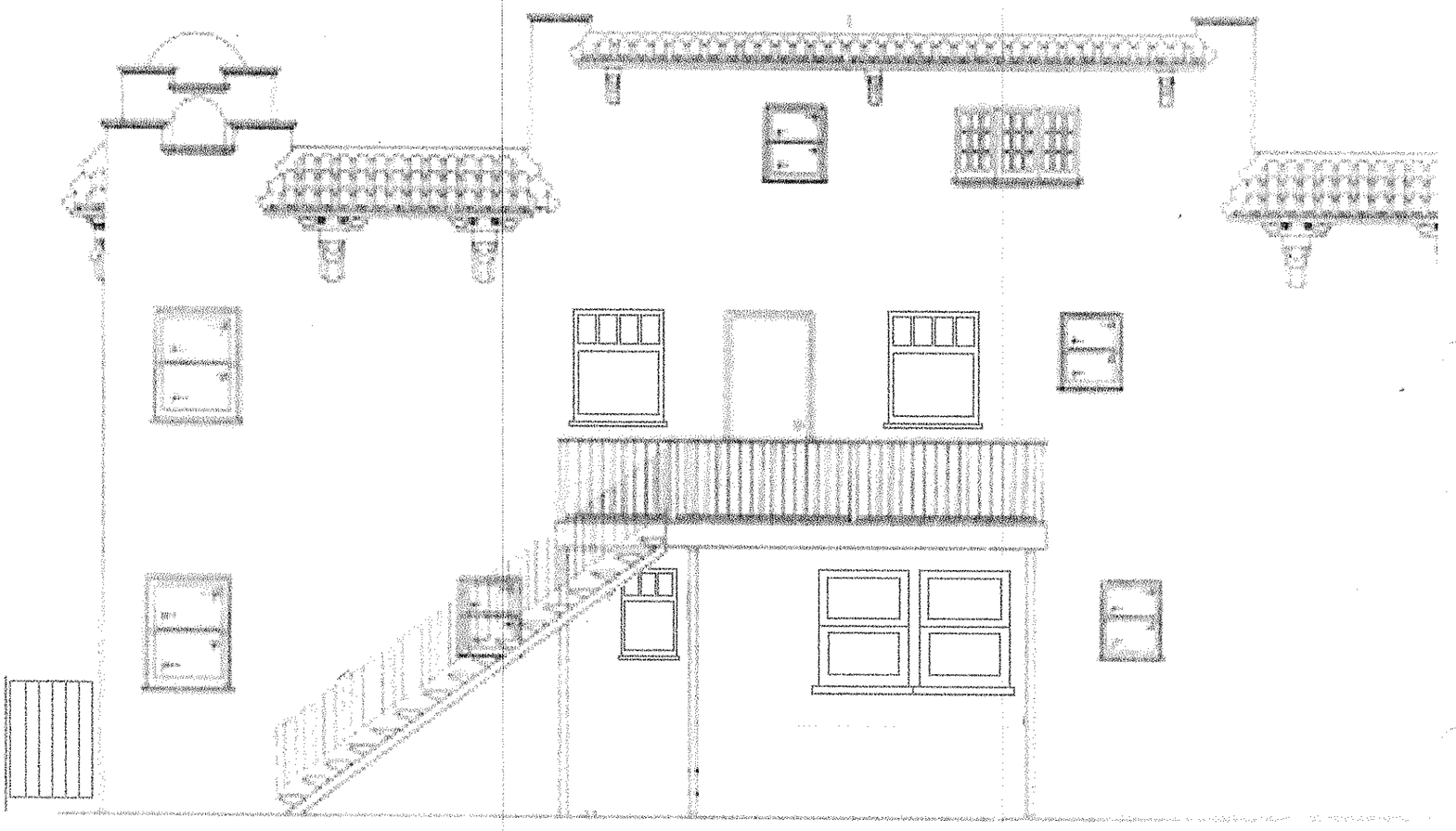

EXISTING EAST (L. SIDE) ELEVATION

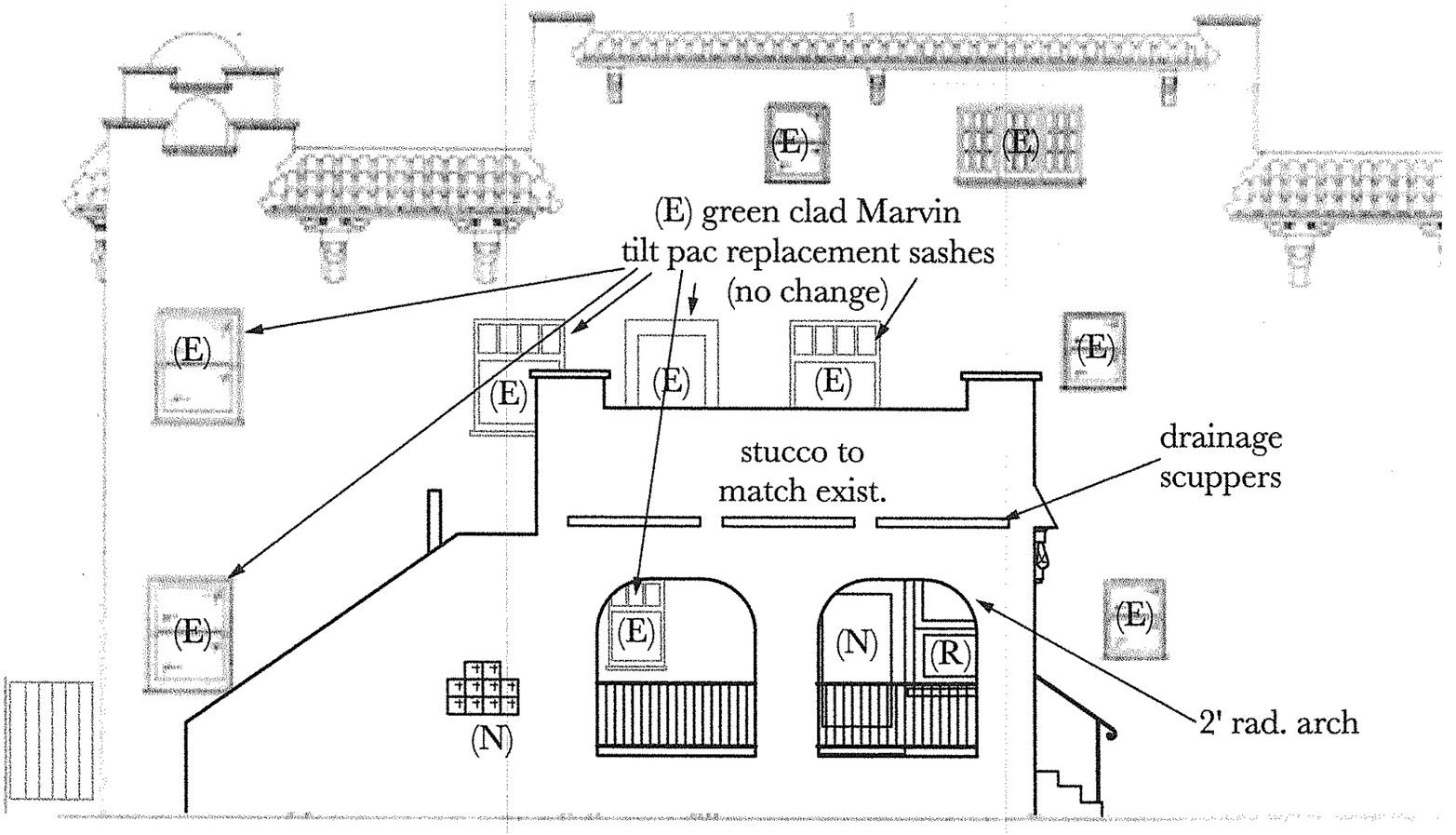

PROPOSED EAST (L. SIDE) ELEVATION

3/16"=1"

remodel of the:	project design & general contractor:	SHEET A-8
the CASBAH 1546 Santa Clara Ave. Alameda, Ca	Mc Neil Construction Co. 1540 Santa Clara Ave., Alameda, Ca. Lic. #487730 phone/fax:510.521.2050	Drawn by: Date: 7/10/13